Class Problem 1 **Nose Wheel Problem** **S99**

(revised)

An airplane nose landing gear is modeled as a lumped mass m_2 attached to an airplane m_1 by a spring k_1 and dashpot c. The tire forces are modeled as a spring k_2 moved by a sinusoidally rough runway. H & R are the pertinent distances at the equilibrium position. Sketch free body diagrams showing all forces and

1. **derive the 2nd order differential equations describing the motion from first principles (ΣF=ma)**
2. **cast the equations in the form of first order equations ($\frac{dy}{dt} = \ldots$).**
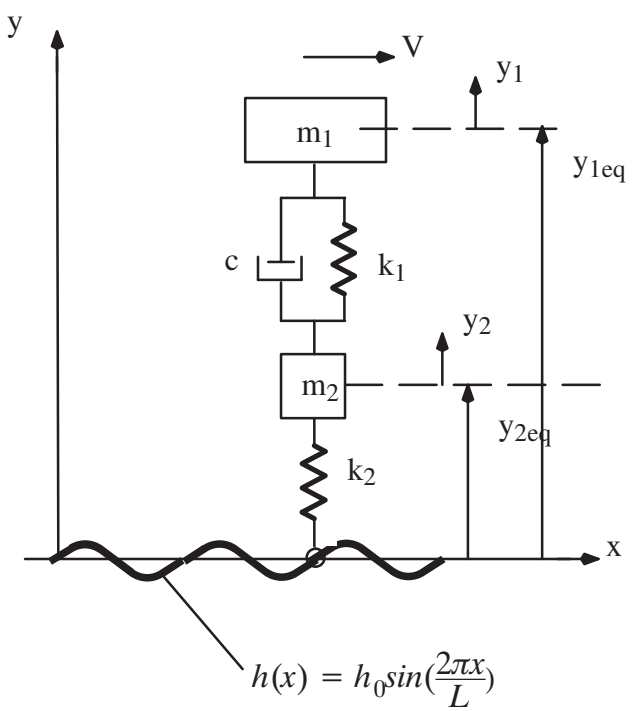
Work in small groups. Each person hand in the his/her own copies of sketches and solution by Thursday, Mar 4.