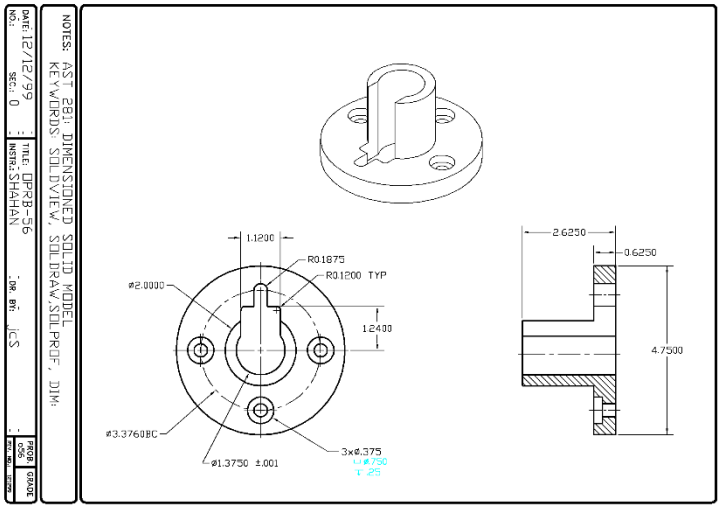
NOTES: AST 281: DIMENSIONED SOLID MODEL
KEYWORDS: SOLDIVIEW, SOLDRAW, SOLPROF, DIM:
DATE: 12/12/99
NO.:
SEC.: 0
TITLE: DPRB-56
INSTR.: SHAHAN
DR. BY: JCS
PROB. 056
GRADE
1.1200
R0.1875
R0.1200 TYP
ø2.0000
1.2400
ø3.3760BC
ø1.3750 ±.001
3xø.375
2.6250
0.6250
4.7500

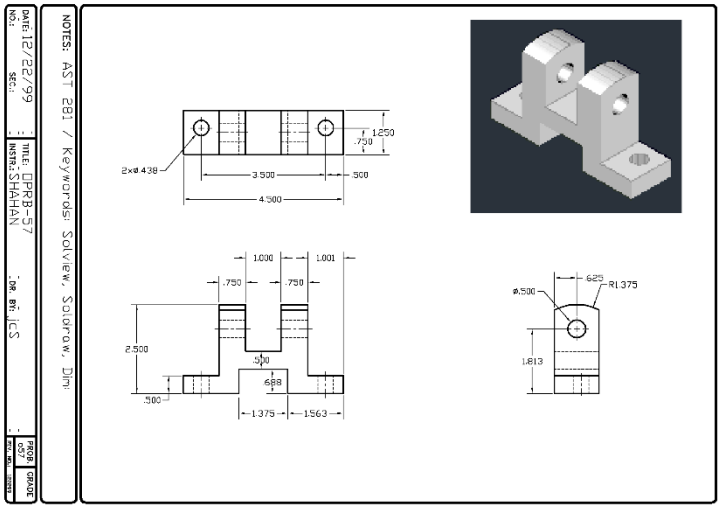
NOTES: AST 281 / Keywords: Solview, Soldraw, Dim:
DATE: 12/22/99
NO.:
SEC.:
TITLE: DPRB-57
INSTR.: SHAHAN
DR. BY: JCS
PROB. 057
GRADE
2xø.438
1.250
.750
3.500
.500
4.500
1.000
1.001
.750
.750
2.500
.500
.688
.500
1.375
1.563
ø.500
.625
R1.375
1.813

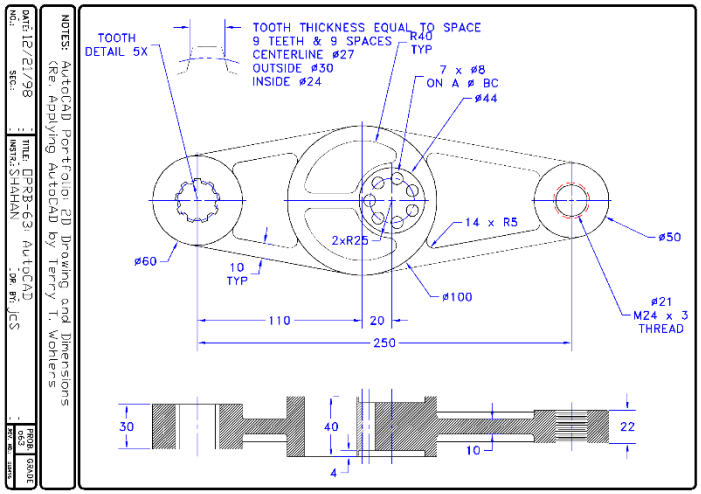
NOTES: AutoCAD Portfolio: 2D Drawing and Dimensions
(Re. Applying AutoCAD by Terry T. Wohlers
DATE: 12/12/98
NO.:
SEC.:
TITLE: DPRB-63 AutoCAD
INSTR.: SHAHAN
DR. BY: JCS
PROB. 063
GRADE
TOOTH DETAIL 5X
TOOTH THICKNESS EQUAL TO SPACE
9 TEETH & 9 SPACES
CENTERLINE ø27
OUTSIDE ø30
INSIDE ø24
R40 TYP
7 x ø8
ON A ø BC
ø44
14 x R5
2xR25
ø60
10 TYP
ø100
ø50
ø21
M24 x 3
THREAD
110
20
250
30
40
10
22
4

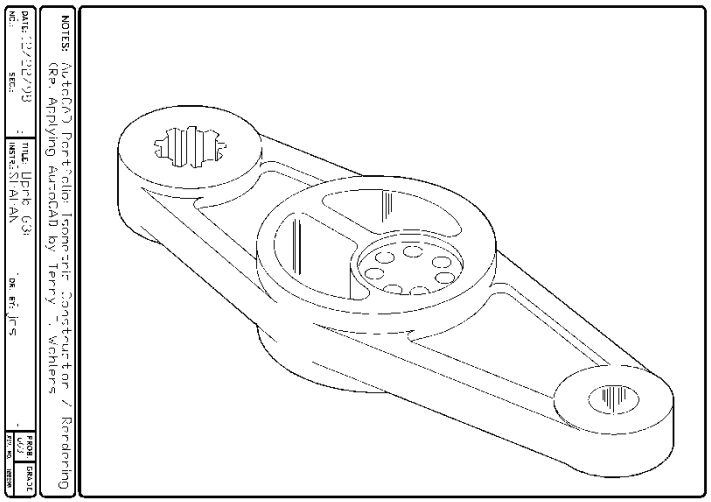
NOTES: AutoCAD Portfolio: Isometric Constructor / Rendering
(Re. Applying AutoCAD by Terry T. Wohlers
DATE: 12/22/99
NO.:
SEC.:
TITLE: Uprb 63
INSTR.: SHAHAN
DR. BY: JCS
PROB. 063
GRADE

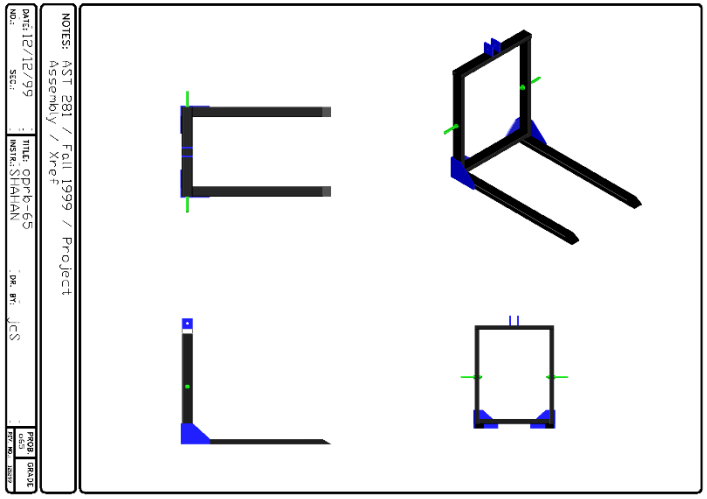
NOTES: AST 281 / Fall 1999 / Project
Assembly / Xref
DATE: 12/12/99
NO.:
SEC.:
TITLE: OPRB-65
INSTR: SHAHAN
DR. BY: JCS
PROB: OPRB-65
GRADE:
REV. NO.:
REVISION

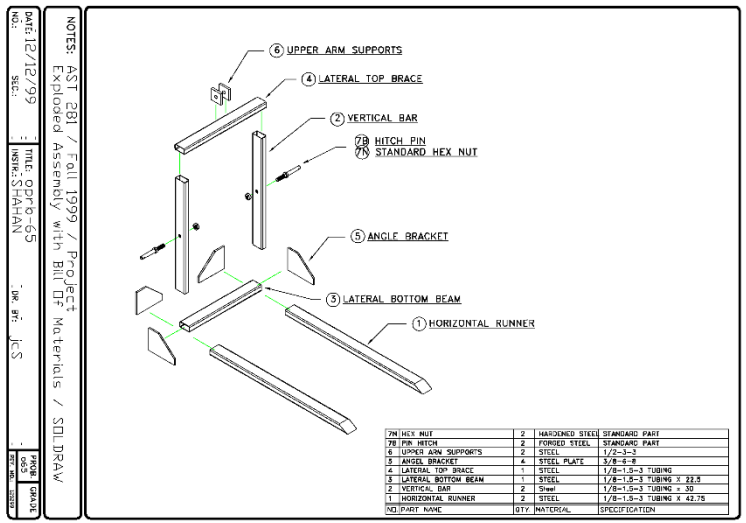
NOTES: AST 281 / Fall 1999 / Project
Exploded Assembly with Bill Of Materials / SOLDRAW
DATE: 12/12/99
NO.:
SEC.:
TITLE: OPRB-65
INSTR: SHAHAN
DR. BY: JCS
PROB: OPRB-65
GRADE:
REV. NO.:
REVISION
6 UPPER ARM SUPPORTS
4 LATERAL TOP BRACE
2 VERTICAL BAR
7B HITCH PIN
7N STANDARD HEX NUT
5 ANGLE BRACKET
3 LATERAL BOTTOM BEAM
1 HORIZONTAL RUNNER
7N HEX NUT 2 HARDENED STEEL STANDARD PART
7B PIN: HITCH 2 FORGED STEEL STANDARD PART
6 UPPER ARM SUPPORTS 2 STEEL 1/2-3-3
5 ANGEL BRACKET 4 STEEL PLATE 3/8-6-8
4 LATERAL TOP BRACE 1 STEEL 1/8-1.5-3 TUBING
3 LATERAL BOTTOM BEAM 1 STEEL 1/8-1.5-3 TUBING X 22.5
2 VERTICAL BAR 2 Steel 1/8-1.5-3 TUBING x 30
1 HORIZONTAL RUNNER 2 STEEL 1/8-1.5-3 TUBING X 42.75
NO. PART NAME QTY. MATERIAL SPECIFICATION

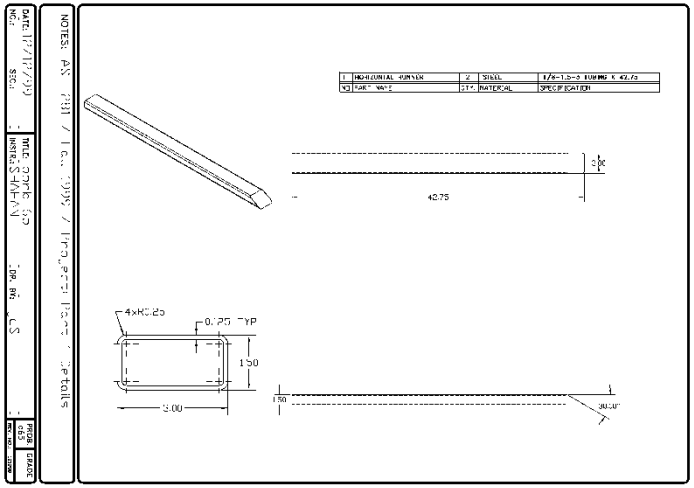
NOTES: AST 281 / Fall 1999 / Project Parts Details
DATE: 12/12/99
NO.:
SEC.:
TITLE: OPRB-65
INSTR: SHAHAN
DR. BY: JCS
PROB: OPRB-65
GRADE:
REV. NO.:
REVISION
1 HORIZONTAL RUNNER 2 STEEL 1/8-1.5-3 TUBING X 42.75
NO. PART NAME QTY. MATERIAL SPECIFICATION
42.75
4xR0.25
0.125 TYP
1.50
3.00
30.00

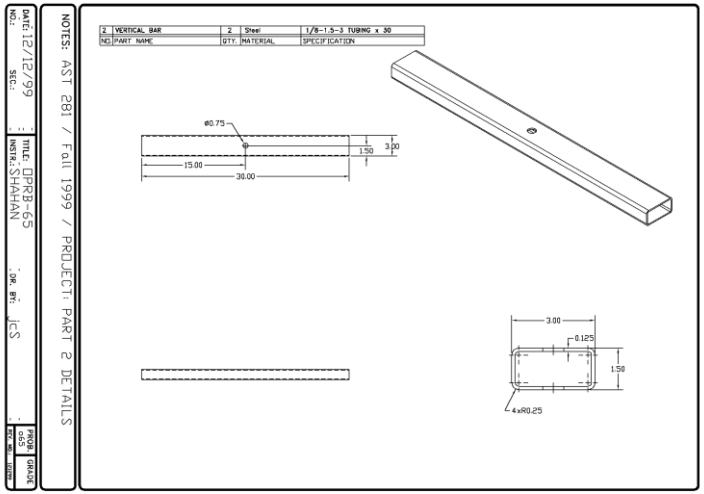
NOTES: AST 281 / Fall 1999 / PROJECT: PART 2 DETAILS
DATE: 12/12/99
NO.:
SEC.:
TITLE: OPRB-65
INSTR: SHAHAN
DR. BY: JCS
PROB: OPRB-65
GRADE:
REV. NO.:
REVISION
2 VERTICAL BAR 2 Steel 1/8-1.5-3 TUBING x 30
NO. PART NAME QTY. MATERIAL SPECIFICATION
ø0.75
15.00
30.00
1.50
3.00
0.125
4xR0.25

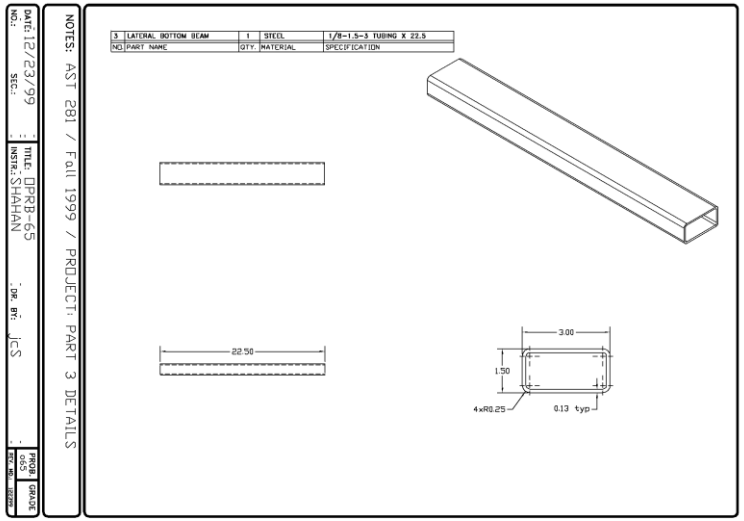
3 LATERAL BOTTOM BEAM 1 STEEL 1/8-1.5-3 TUBING X 22.5
NO. PART NAME QTY. MATERIAL SPECIFICATION
22.50
3.00
1.50
4xR0.25
0.13 typ
NOTES: AST 281 / Fall 1999 / PROJECT: PART 3 DETAILS
DATE: 12/23/99
TITLE: DPRB-65
INSTR: SHAHAN
DR. BY: JCS

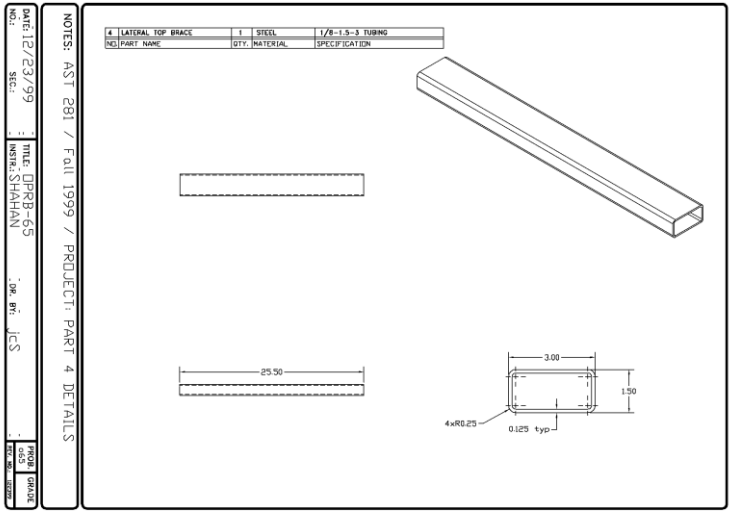
4 LATERAL TOP BRACE 1 STEEL 1/8-1.5-3 TUBING
NO. PART NAME QTY. MATERIAL SPECIFICATION
25.50
3.00
1.50
4xR0.25
0.125 typ
NOTES: AST 281 / Fall 1999 / PROJECT: PART 4 DETAILS
DATE: 12/23/99
TITLE: DPRB-65
INSTR: SHAHAN
DR. BY: JCS

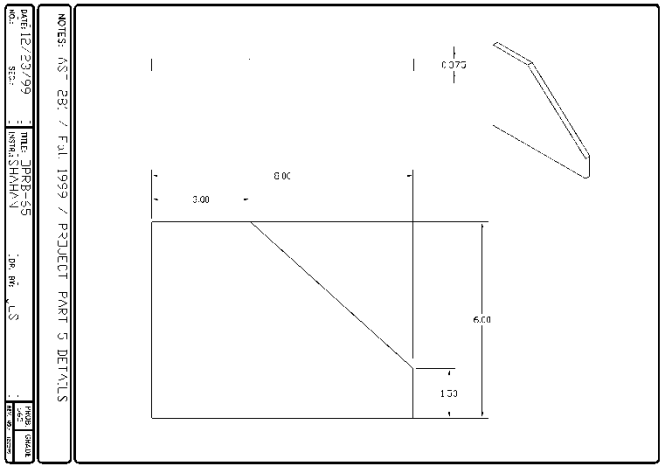
0.375
3.00
6.00
1.50
NOTES: AST 281 / Fall 1999 / PROJECT PART 5 DETAILS
DATE: 12/23/99
TITLE: DPRB-65
INSTR: SHAHAN
DR. BY: JCS

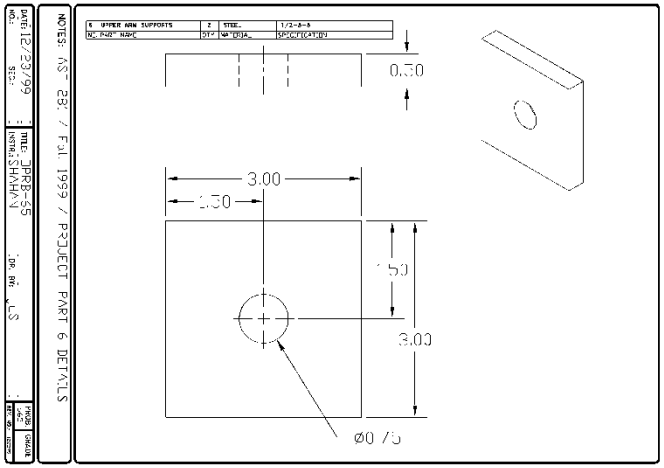
6 UPPER ARM SUPPORTS 2 STEEL 1/2-2-8
NO. PART NAME QTY. MATERIAL SPECIFICATION
0.50
3.00
1.50
1.50
3.00
Ø0.75
NOTES: AST 281 / Fall 1999 / PROJECT PART 6 DETAILS
DATE: 12/23/99
TITLE: DPRB-65
INSTR: SHAHAN
DR. BY: JCS

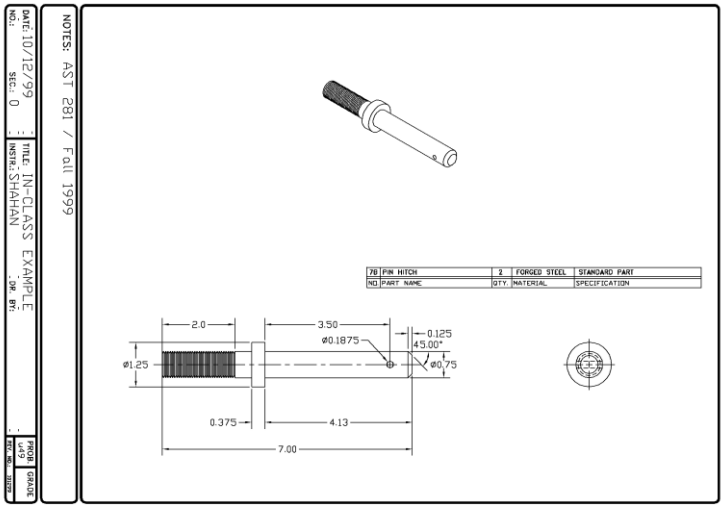
NOTES: AST 281 / Fall 1999
DATE: 10/12/99
NO.: SEC: 0
TITLE: IN-CLASS EXAMPLE
INSTR.: SHAHAN
DWN BY:
PROJ#
GRADE
REV NO.
SHEET
7B PIN HITCH 2 FORGED STEEL STANDARD PART
NO. PART NAME QTY. MATERIAL SPECIFICATION
2.0
3.50
0.125
Ø0.1875
45.00°
Ø1.25
Ø0.75
0.375
4.13
7.00

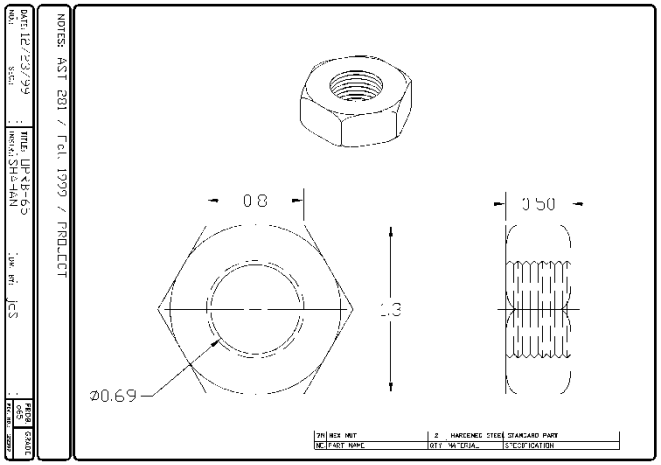
NOTES: AST 281 / Fall 1999 / PROJECT
DATE: 12/23/99
NO.:
SEC.:
TITLE: UP-X-B-5
INSTR.: SHAHAN
DWN BY: JCS
PROJ#
GRADE
REV NO.
SHEET
7N HEX NUT 2 HARDENED STEEL STANDARD PART
NO. PART NAME QTY MATERIAL SPECIFICATION
0.8
0.50
1.3
Ø0.69