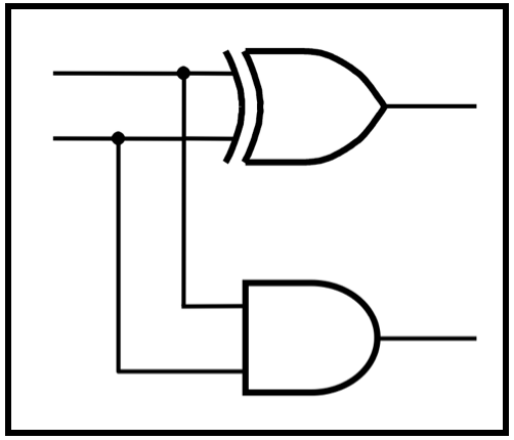

CprE 2810: Digital Logic

Instructor: Alexander Stoytchev

http://www.ece.iastate.edu/~alexs/classes/

Examples of Solved Problems

CprE 2810: Digital Logic
Iowa State University, Ames, IA
Copyright © Alexander Stoytchev

Administrative Stuff

- **HW4 is due today @ 10 pm**

Administrative Stuff

- **HW5 is out**
- **It is due on Monday Sep 29 @ 10pm.**
- **It is posted on the class web page**
- **I also sent you an e-mail with the link.**
- **You can use this as a preparation for the exam.**

Administrative Stuff

- **Midterm Exam #1**
- **When: Friday Sep 26.**
- **What: Chapter 1 and Chapter 2 plus number systems**
- **The exam will be closed book but open notes (you can bring up to 3 sheets of handwritten notes).**
- **It will be in this room.**
- **Review session: This Wednesday during lecture**

Topics for the Midterm Exam

- Binary Numbers
- Octal Numbers
- Hexadecimal Numbers
- Conversion between the different number systems
- Truth Tables
- Boolean Algebra
- Logic Gates
- Circuit Synthesis with AND, OR, NOT
- Circuit Synthesis with NAND, NOR
- Converting an AND/OR/NOT circuit to NAND circuit
- Converting an AND/OR/NOT circuit to NOR circuit
- SOP and POS expressions

Topics for the Midterm Exam

- Mapping a Circuit to Verilog code
- Mapping Verilog code to a circuit

- Multiplexers
- Venn Diagrams
- K-maps for 2, 3, and 4 variables

- Minimization of Boolean expressions using theorems
- Minimization of Boolean expressions with K-maps

- Incompletely specified functions (with don't cares)
- Functions with multiple outputs

- Something from Star Wars

All possible Boolean functions with two input variables

There are 16 possible Boolean functions with two input variables

x	y	F_0	F_1	F_2	F_3	F_4	F_5	F_6	F_7	F_8	F_9	F_{10}	F_{11}	F_{12}	F_{13}	F_{14}	F_{15}
0	0	0	1	0	1	0	1	0	1	0	1	0	1	0	1	0	1
0	1	0	0	1	1	0	0	1	1	0	0	1	1	0	0	1	1
1	0	0	0	0	0	1	1	1	1	0	0	0	0	1	1	1	1
1	1	0	0	0	0	0	0	0	0	1	1	1	1	1	1	1	1

There are 16 possible Boolean functions with two input variables

x	y	F_0	F_1	F_2	F_3	F_4	F_5	F_6	F_7	F_8	F_9	F_{10}	F_{11}	F_{12}	F_{13}	F_{14}	F_{15}
0	0	0	1	0	1	0	1	0	1	0	1	0	1	0	1	0	1
0	1	0	0	1	1	0	0	1	1	0	0	1	1	0	0	1	1
1	0	0	0	0	0	1	1	1	1	0	0	0	0	1	1	1	1
1	1	0	0	0	0	0	0	0	0	1	1	1	1	1	1	1	1

constant 0

constant 1

There are 16 possible Boolean functions with two input variables

x	y	F_0	F_1	F_2	F_3	F_4	F_5	F_6	F_7	F_8	F_9	F_{10}	F_{11}	F_{12}	F_{13}	F_{14}	F_{15}
0	0	0	1	0	1	0	1	0	1	0	1	0	1	0	1	0	1
0	1	0	0	1	1	0	0	1	1	0	0	1	1	0	0	1	1
1	0	0	0	0	0	1	1	1	1	0	0	0	0	1	1	1	1
1	1	0	0	0	0	0	0	0	0	1	1	1	1	1	1	1	1

NOR(x, y)

OR(x, y)

There are 16 possible Boolean functions with two input variables

x	y	F_0	F_1	F_2	F_3	F_4	F_5	F_6	F_7	F_8	F_9	F_{10}	F_{11}	F_{12}	F_{13}	F_{14}	F_{15}
0	0	0	1	0	1	0	1	0	1	0	1	0	1	0	1	0	1
0	1	0	0	1	1	0	0	1	1	0	0	1	1	0	0	1	1
1	0	0	0	0	0	1	1	1	1	0	0	0	0	1	1	1	1
1	1	0	0	0	0	0	0	0	0	1	1	1	1	1	1	1	1

$m_1 = \bar{x}\, y$

$M_1 = x + \bar{y}$

There are 16 possible Boolean functions with two input variables

x	y	F_0	F_1	F_2	F_3	F_4	F_5	F_6	F_7	F_8	F_9	F_{10}	F_{11}	F_{12}	F_{13}	F_{14}	F_{15}
0	0	0	1	0	1	0	1	0	1	0	1	0	1	0	1	0	1
0	1	0	0	1	1	0	0	1	1	0	0	1	1	0	0	1	1
1	0	0	0	0	0	1	1	1	1	0	0	0	0	1	1	1	1
1	1	0	0	0	0	0	0	0	0	1	1	1	1	1	1	1	1

NOT(x)

x

There are 16 possible Boolean functions with two input variables

x	y	F_0	F_1	F_2	F_3	F_4	F_5	F_6	F_7	F_8	F_9	F_{10}	F_{11}	F_{12}	F_{13}	F_{14}	F_{15}
0	0	0	1	0	1	0	1	0	1	0	1	0	1	0	1	0	1
0	1	0	0	1	1	0	0	1	1	0	0	1	1	0	0	1	1
1	0	0	0	0	0	1	1	1	1	0	0	0	0	1	1	1	1
1	1	0	0	0	0	0	0	0	0	1	1	1	1	1	1	1	1

$m_2 = x\,\bar{y}$

$M_2 = \bar{x} + y$

There are 16 possible Boolean functions with two input variables

x	y	F_0	F_1	F_2	F_3	F_4	F_5	F_6	F_7	F_8	F_9	F_{10}	F_{11}	F_{12}	F_{13}	F_{14}	F_{15}
0	0	0	1	0	1	0	1	0	1	0	1	0	1	0	1	0	1
0	1	0	0	1	1	0	0	1	1	0	0	1	1	0	0	1	1
1	0	0	0	0	0	1	1	1	1	0	0	0	0	1	1	1	1
1	1	0	0	0	0	0	0	0	0	1	1	1	1	1	1	1	1

NOT(y) y

There are 16 possible Boolean functions with two input variables

x	y	F_0	F_1	F_2	F_3	F_4	F_5	F_6	F_7	F_8	F_9	F_{10}	F_{11}	F_{12}	F_{13}	F_{14}	F_{15}
0	0	0	1	0	1	0	1	0	1	0	1	0	1	0	1	0	1
0	1	0	0	1	1	0	0	1	1	0	0	1	1	0	0	1	1
1	0	0	0	0	0	1	1	1	1	0	0	0	0	1	1	1	1
1	1	0	0	0	0	0	0	0	0	1	1	1	1	1	1	1	1

XOR(x, y) XNOR(x, y)

There are 16 possible Boolean functions with two input variables

x	y	F_0	F_1	F_2	F_3	F_4	F_5	F_6	F_7	F_8	F_9	F_{10}	F_{11}	F_{12}	F_{13}	F_{14}	F_{15}
0	0	0	1	0	1	0	1	0	1	0	1	0	1	0	1	0	1
0	1	0	0	1	1	0	0	1	1	0	0	1	1	0	0	1	1
1	0	0	0	0	0	1	1	1	1	0	0	0	0	1	1	1	1
1	1	0	0	0	0	0	0	0	0	1	1	1	1	1	1	1	1

NAND(x, y) AND(x, y)

There are 16 possible Boolean functions with two input variables

x	y	F_0	F_1	F_2	F_3	F_4	F_5	F_6	F_7	F_8	F_9	F_{10}	F_{11}	F_{12}	F_{13}	F_{14}	F_{15}
0	0	0	1	0	1	0	1	0	1	0	1	0	1	0	1	0	1
0	1	0	0	1	1	0	0	1	1	0	0	1	1	0	0	1	1
1	0	0	0	0	0	1	1	1	1	0	0	0	0	1	1	1	1
1	1	0	0	0	0	0	0	0	0	1	1	1	1	1	1	1	1
		0	NOR	m_1	$\bar{x}$	m_2	$\bar{y}$	XOR	NAND	AND	XNOR	y	M_2	x	M_1	OR	1

There are 16 possible Boolean functions with two input variables

x	y	F_0	F_1	F_2	F_3	F_4	F_5	F_6	F_7	F_8	F_9	F_{10}	F_{11}	F_{12}	F_{13}	F_{14}	F_{15}
0	0	0	1	0	1	0	1	0	1	0	1	0	1	0	1	0	1
0	1	0	0	1	1	0	0	1	1	0	0	1	1	0	0	1	1
1	0	0	0	0	0	1	1	1	1	0	0	0	0	1	1	1	1
1	1	0	0	0	0	0	0	0	0	1	1	1	1	1	1	1	1
		0	m_0	m_1	$\bar{x}$	m_2	$\bar{y}$	XOR	M_3	m_3	XNOR	y	M_2	x	M_1	M_0	1

There are 16 possible Boolean functions with two input variables

x	y	F_0	F_1	F_2	F_3	F_4	F_5	F_6	F_7	F_8	F_9	F_{10}	F_{11}	F_{12}	F_{13}	F_{14}	F_{15}
0	0	0	1	0	1	0	1	0	1	0	1	0	1	0	1	0	1
0	1	0	0	1	1	0	0	1	1	0	0	1	1	0	0	1	1
1	0	0	0	0	0	1	1	1	1	0	0	0	0	1	1	1	1
1	1	0	0	0	0	0	0	0	0	1	1	1	1	1	1	1	1
		0	m_0	m_1	$\bar{x}$	m_2	$\bar{y}$	$m_1 + m_2$	M_3	m_3	$M_1 \bullet M_2$	y	M_2	x	M_1	M_0	1

There are 16 possible Boolean functions with two input variables

x	y	F_0	F_1	F_2	F_3	F_4	F_5	F_6	F_7	F_8	F_9	F_{10}	F_{11}	F_{12}	F_{13}	F_{14}	F_{15}
0	0	0	1	0	1	0	1	0	1	0	1	0	1	0	1	0	1
0	1	0	0	1	1	0	0	1	1	0	0	1	1	0	0	1	1
1	0	0	0	0	0	1	1	1	1	0	0	0	0	1	1	1	1
1	1	0	0	0	0	0	0	0	0	1	1	1	1	1	1	1	1
		0	m_0	m_1	$m_0 + m_1$	m_2	$m_0 + m_2$	$m_1 + m_2$	M_3	m_3	$M_1 \bullet M_2$	$M_0 \bullet M_2$	M_2	$M_0 \bullet M_1$	M_1	M_0	1

K-Maps for all 16 possible functions with two input variables

K-Maps for the 16 functions

y \ x	0	1
0	1	0
1	0	0

$\bar{x}\,\bar{y}$

F_1

y \ x	0	1
0	0	0
1	1	0

$\bar{x}\,y$

F_2

y \ x	0	1
0	0	1
1	0	0

$x\,\bar{y}$

F_4

y \ x	0	1
0	0	0
1	0	1

$x\,y$

F_8

K-Maps for the 16 functions

y \ x	0	1
0	1	0
1	1	0

$\bar{x}$

F_3

y \ x	0	1
0	0	1
1	0	1

x

F_{12}

y \ x	0	1
0	1	1
1	0	0

$\bar{y}$

F_5

y \ x	0	1
0	0	0
1	1	1

y

F_{10}

K-Maps for the 16 functions

y \ x	0	1
0	1	1
1	1	0

$\bar{x} + \bar{y}$

F_7

y \ x	0	1
0	1	0
1	1	1

$\bar{x} + y$

F_{11}

y \ x	0	1
0	1	1
1	0	1

$x + \bar{y}$

F_{13}

y \ x	0	1
0	0	1
1	1	1

$x + y$

F_{14}

K-Maps for the 16 functions

y \ x	0	1
0	0	0
1	0	0

constant 0

F_0

y \ x	0	1
0	1	1
1	1	1

constant 1

F_{15}

These are not valid groupings, but they correspond to XOR and XNOR

y \ x	0	1
0	0	1
1	1	0

y \ x	0	1
0	1	0
1	0	1

These are not valid groupings, but they correspond to XOR and XNOR

y \ x	0	1
0	0	1
1	1	0

XOR(x, y)

F_6

y \ x	0	1
0	1	0
1	0	1

XNOR(x, y)

F_9

The Link Between Truth Tables and Venn Diagrams

Place the minterms on the Venn diagram

A	B	
0	0	m_0
0	1	m_1
1	0	m_2
1	1	m_3

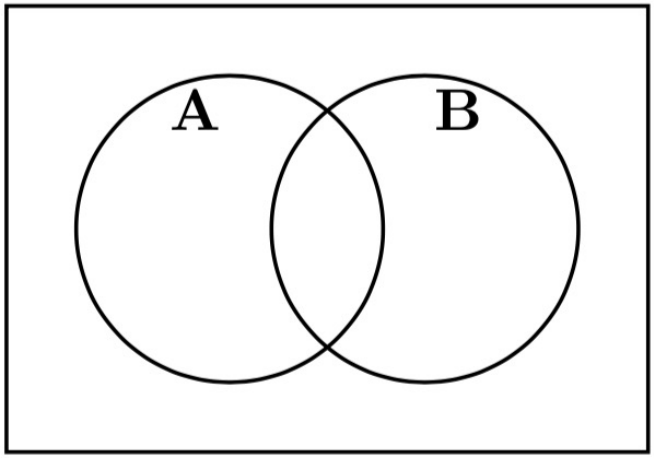

Place the minterms on the Venn diagram

A	B	
0	0	m_0
0	1	m_1
1	0	m_2
1	1	m_3

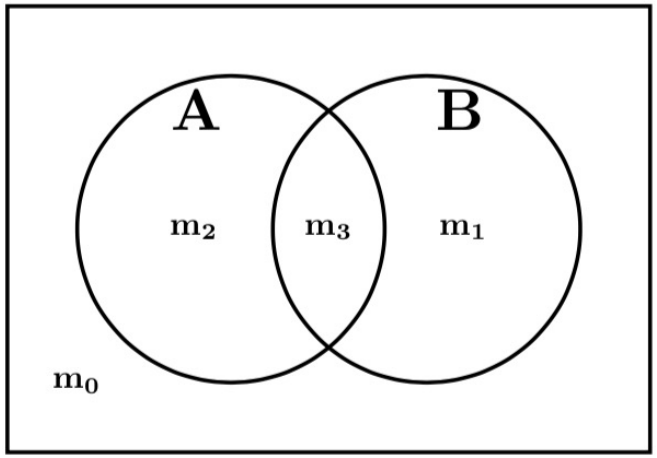

Color the Venn diagram for XOR

A	B	F
0	0	0
0	1	1
1	0	1
1	1	0

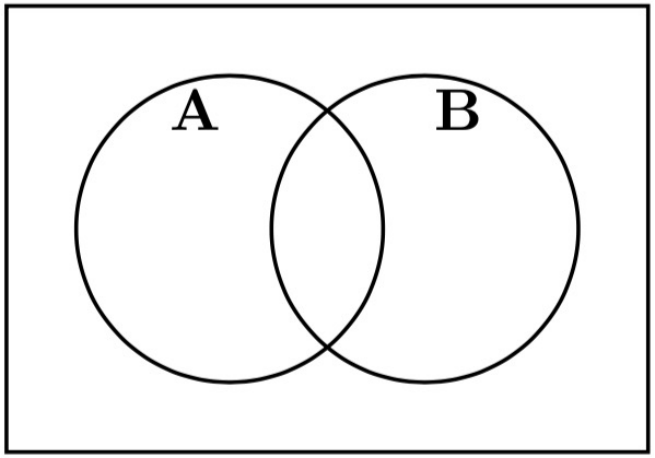

Color the Venn diagram for XOR

A	B	F
0	0	0
0	1	1
1	0	1
1	1	0

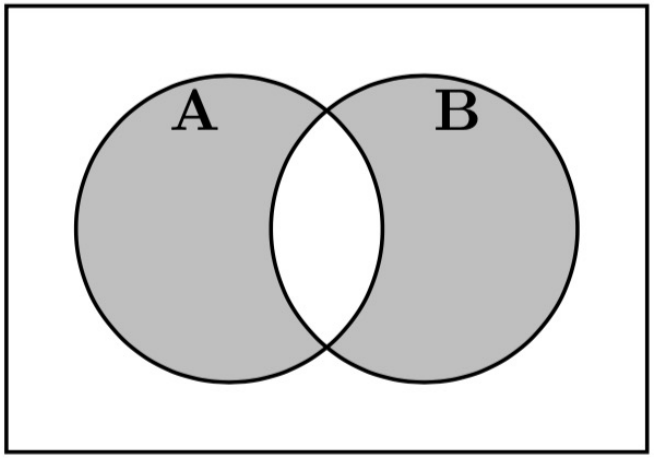

Color the Venn diagram for XOR

	A	B	F
m_0	0	0	0
m_1	0	1	1
m_2	1	0	1
m_3	1	1	0

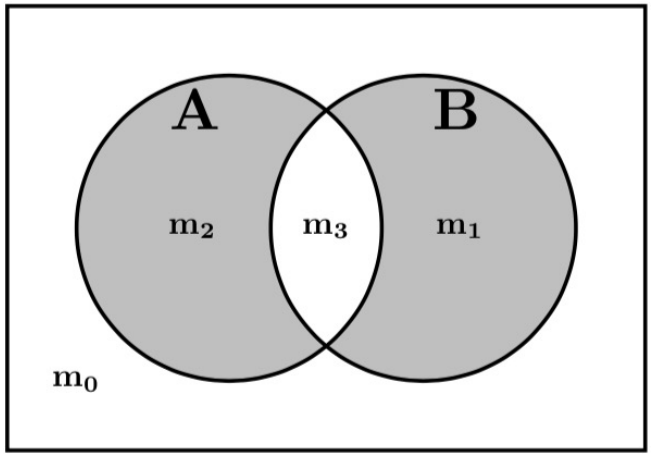

$$F = \overline{A}\,B + A\,\overline{B}$$

Place the minterms on the Venn diagram

A	B	C	
0	0	0	m_0
0	0	1	m_1
0	1	0	m_2
0	1	1	m_3
1	0	0	m_4
1	0	1	m_5
1	1	0	m_6
1	1	1	m_7

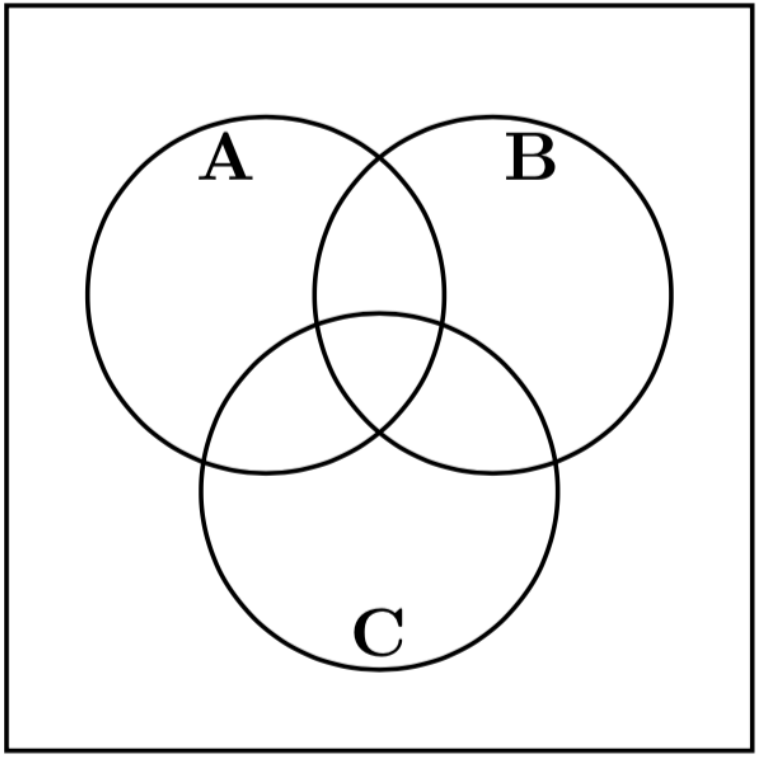

Place the minterms on the Venn diagram

A	B	C	
0	0	0	m_0
0	0	1	m_1
0	1	0	m_2
0	1	1	m_3
1	0	0	m_4
1	0	1	m_5
1	1	0	m_6
1	1	1	m_7

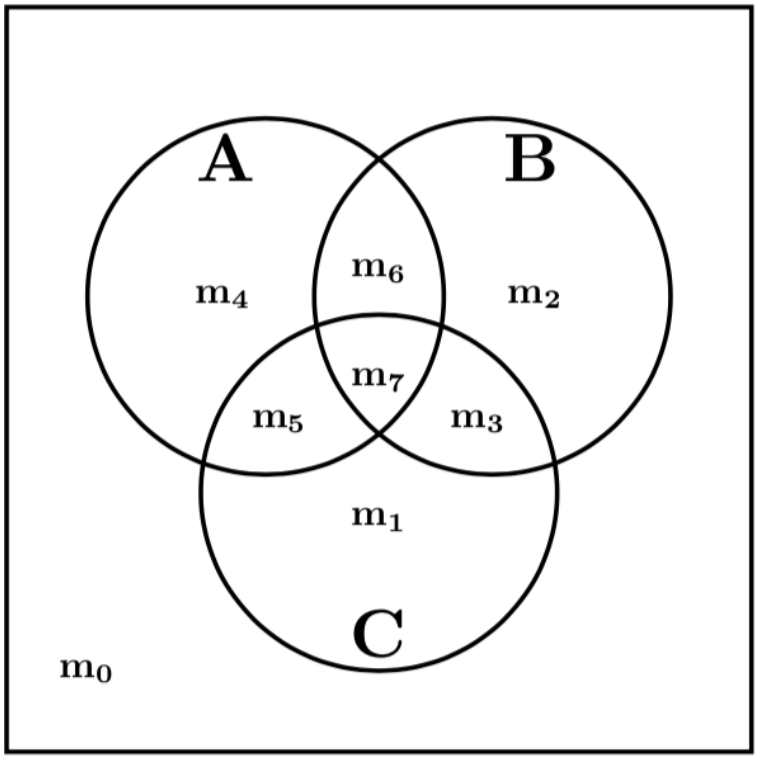

Color the Venn diagram for this function

A	B	C	F
0	0	0	0
0	0	1	0
0	1	0	0
0	1	1	1
1	0	0	1
1	0	1	1
1	1	0	0
1	1	1	1

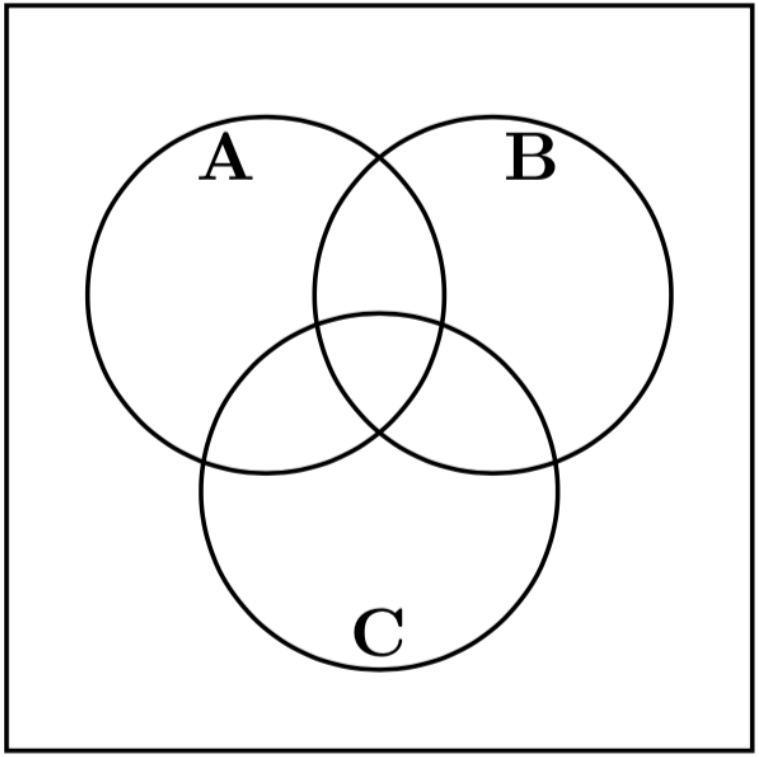

Color the Venn diagram for this function

A	B	C	F
0	0	0	0
0	0	1	0
0	1	0	0
0	1	1	1
1	0	0	1
1	0	1	1
1	1	0	0
1	1	1	1

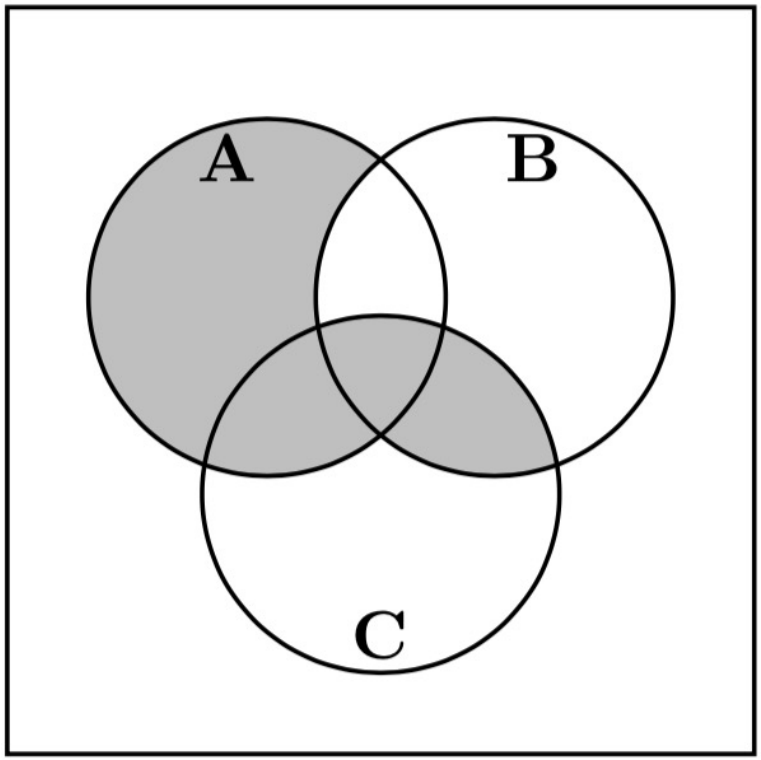

Place the minterms on the Venn diagram

	A	B	C	F
m_0	0	0	0	0
m_1	0	0	1	0
m_2	0	1	0	0
m_3	0	1	1	1
m_4	1	0	0	1
m_5	1	0	1	1
m_6	1	1	0	0
m_7	1	1	1	1

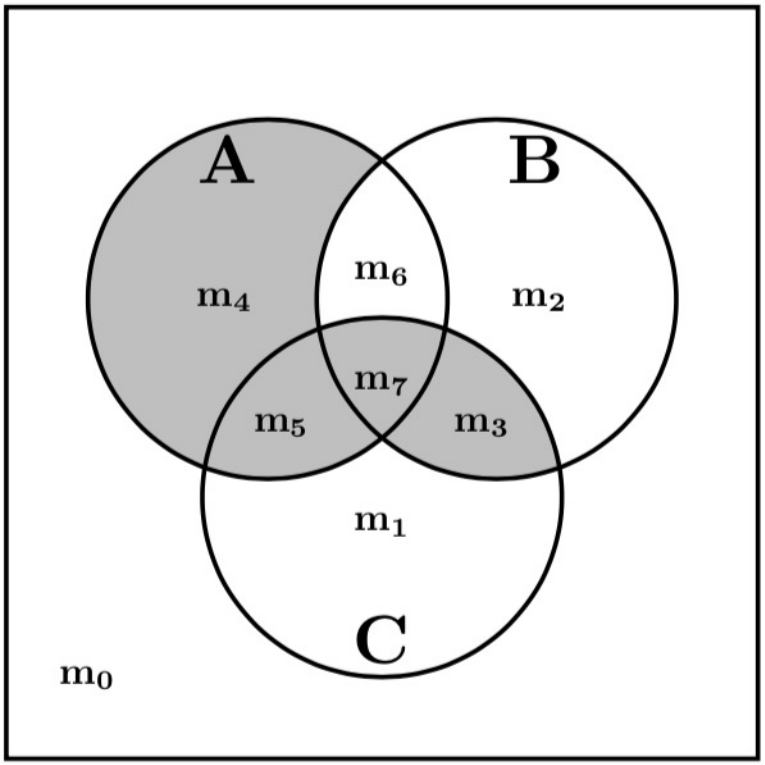

Color the Venn diagram for this function

A	B	C	F
0	0	0	1
0	0	1	1
0	1	0	1
0	1	1	0
1	0	0	1
1	0	1	0
1	1	0	0
1	1	1	1

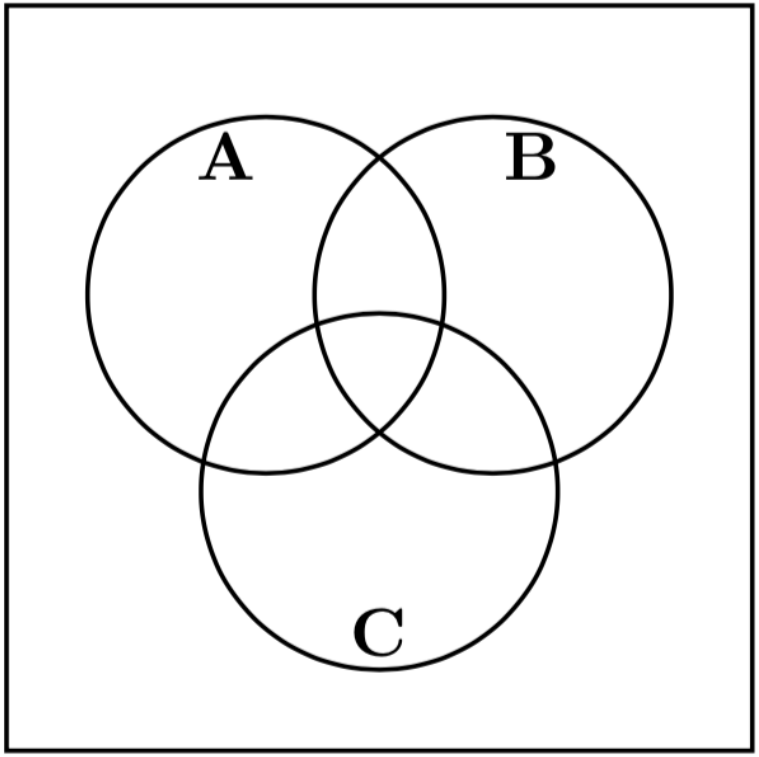

Color the Venn diagram for this function

A	B	C	F
0	0	0	1
0	0	1	1
0	1	0	1
0	1	1	0
1	0	0	1
1	0	1	0
1	1	0	0
1	1	1	1

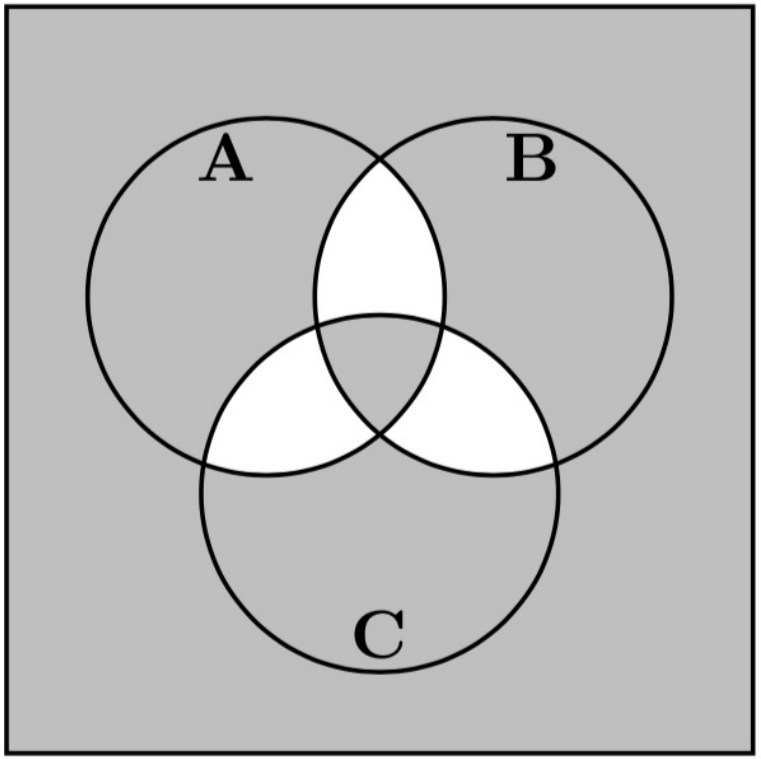

Place the minterms on the Venn diagram

	A	B	C	F
m_0	0	0	0	1
m_1	0	0	1	1
m_2	0	1	0	1
m_3	0	1	1	0
m_4	1	0	0	1
m_5	1	0	1	0
m_6	1	1	0	0
m_7	1	1	1	1

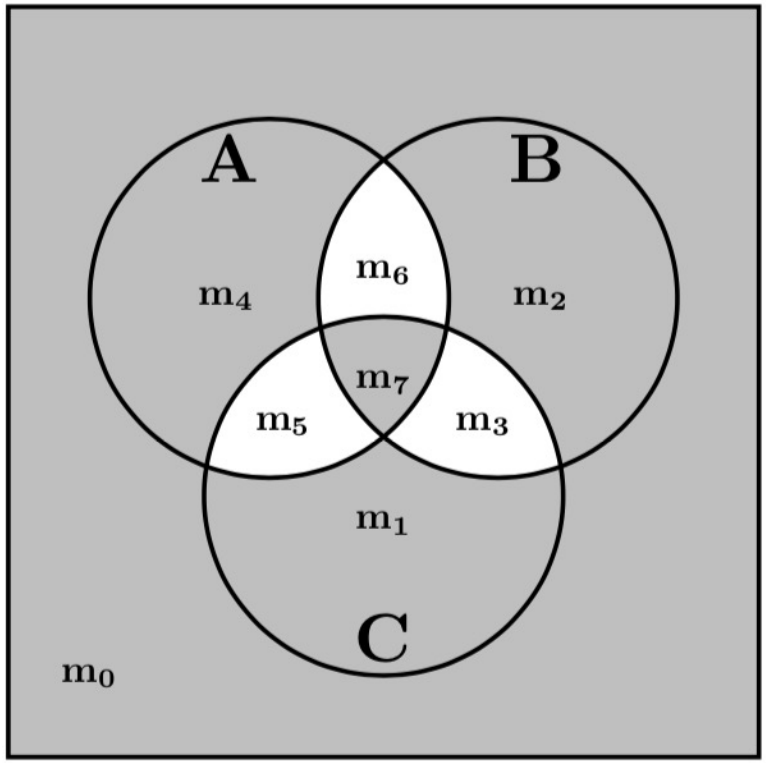

Write the expression that is represented by each of the three Venn diagrams:

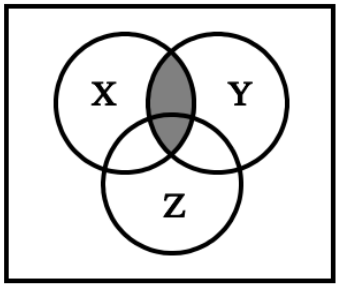

(A)

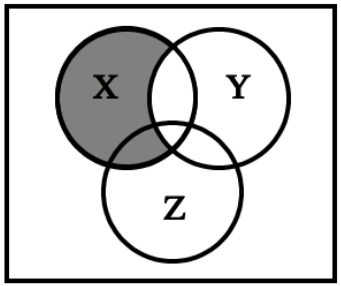

(B)

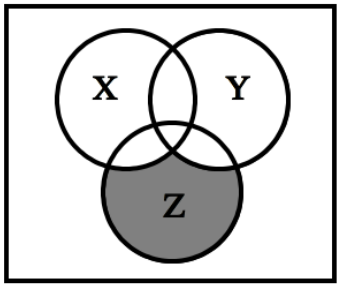

(C)

Write the expression that is represented by each of the three Venn diagrams:

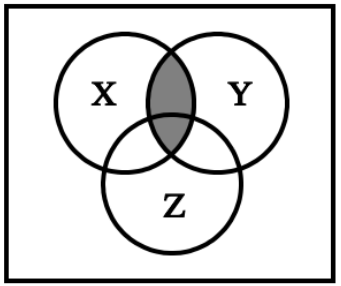

(A)

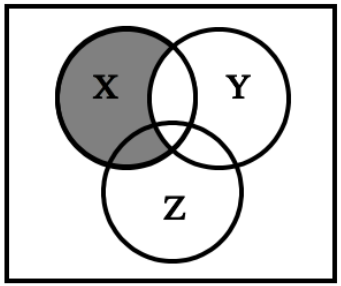

(B)

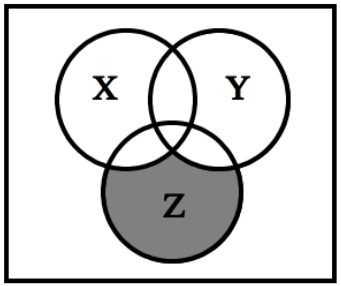

(C)

XY

$X\overline{Y}$

$\overline{X}\,\overline{Y}Z$

Example 1

Determine if the following equation is valid

$$\bar{x}_1\bar{x}_3 + x_2x_3 + x_1\bar{x}_2 = \bar{x}_1x_2 + x_1x_3 + \bar{x}_2\bar{x}_3$$

$$\bar{x}_1\bar{x}_3 + x_2x_3 + x_1\bar{x}_2 \overset{?}{=} \bar{x}_1x_2 + x_1x_3 + \bar{x}_2\bar{x}_3$$

$$\underbrace{\bar{x}_1\bar{x}_3 + x_2x_3 + x_1\bar{x}_2}_{\text{LHS}} \overset{?}{=} \underbrace{\bar{x}_1x_2 + x_1x_3 + \bar{x}_2\bar{x}_3}_{\text{RHS}}$$

Left-Hand Side (LHS)

Row number	x_1	x_2	x_3	$\overline{x_1}\,\overline{x_3}$	$x_2\,x_3$	$x_1\,\overline{x_2}$	f
0	0	0	0				
1	0	0	1				
2	0	1	0				
3	0	1	1				
4	1	0	0				
5	1	0	1				
6	1	1	0				
7	1	1	1				

Left-Hand Side (LHS)

Row number	x_1	x_2	x_3	$\overline{x_1}\,\overline{x_3}$	$x_2\,x_3$	$x_1\,\overline{x_2}$	f
0	0	0	0	1	0	0	
1	0	0	1	0	0	0	
2	0	1	0	1	0	0	
3	0	1	1	0	1	0	
4	1	0	0	0	0	1	
5	1	0	1	0	0	1	
6	1	1	0	0	0	0	
7	1	1	1	0	1	0	

Left-Hand Side (LHS)

Row number	x_1	x_2	x_3	$\overline{x_1}\,\overline{x_3}$	$x_2\,x_3$	$x_1\,\overline{x_2}$	f
0	0	0	0	1	0	0	1
1	0	0	1	0	0	0	0
2	0	1	0	1	0	0	1
3	0	1	1	0	1	0	1
4	1	0	0	0	0	1	1
5	1	0	1	0	0	1	1
6	1	1	0	0	0	0	0
7	1	1	1	0	1	0	1

Right-Hand Side (RHS)

Row number	x_1	x_2	x_3	$\overline{x}_1 x_2$	$x_1 x_3$	$\overline{x}_2\ \overline{x}_3$	f
0	0	0	0				
1	0	0	1				
2	0	1	0				
3	0	1	1				
4	1	0	0				
5	1	0	1				
6	1	1	0				
7	1	1	1				

Right-Hand Side (RHS)

Row number	x_1	x_2	x_3	$\overline{x}_1 x_2$	$x_1 x_3$	$\overline{x}_2\,\overline{x}_3$	f
0	0	0	0	0	0	1	
1	0	0	1	0	0	0	
2	0	1	0	1	0	0	
3	0	1	1	1	0	0	
4	1	0	0	0	0	1	
5	1	0	1	0	1	0	
6	1	1	0	0	0	0	
7	1	1	1	0	1	0	

Right-Hand Side (RHS)

Row number	x_1	x_2	x_3	$\overline{x}_1 x_2$	$x_1 x_3$	$\overline{x}_2\,\overline{x}_3$	f
0	0	0	0	0	0	1	1
1	0	0	1	0	0	0	0
2	0	1	0	1	0	0	1
3	0	1	1	1	0	0	1
4	1	0	0	0	0	1	1
5	1	0	1	0	1	0	1
6	1	1	0	0	0	0	0
7	1	1	1	0	1	0	1

$$\underbrace{\bar{x}_1\bar{x}_3 + x_2x_3 + x_1\bar{x}_2}_{\text{LHS}} \overset{?}{=} \underbrace{\bar{x}_1x_2 + x_1x_3 + \bar{x}_2\bar{x}_3}_{\text{RHS}}$$

f	f
1	1
0	0
1	1
1	1
1	1
1	1
0	0
1	1

They are equal.

Example 2

Design the minimum-cost product-of-sums expression for the function

$$f(x_1, x_2, x_3) = \Sigma\, m(0, 2, 4, 5, 6, 7)$$

Minterms and Maxterms (with three variables)

Row number	x_1	x_2	x_3	Minterm	Maxterm
0	0	0	0	$m_0 = \overline{x}_1\overline{x}_2\overline{x}_3$	$M_0 = x_1 + x_2 + x_3$
1	0	0	1	$m_1 = \overline{x}_1\overline{x}_2x_3$	$M_1 = x_1 + x_2 + \overline{x}_3$
2	0	1	0	$m_2 = \overline{x}_1x_2\overline{x}_3$	$M_2 = x_1 + \overline{x}_2 + x_3$
3	0	1	1	$m_3 = \overline{x}_1x_2x_3$	$M_3 = x_1 + \overline{x}_2 + \overline{x}_3$
4	1	0	0	$m_4 = x_1\overline{x}_2\overline{x}_3$	$M_4 = \overline{x}_1 + x_2 + x_3$
5	1	0	1	$m_5 = x_1\overline{x}_2x_3$	$M_5 = \overline{x}_1 + x_2 + \overline{x}_3$
6	1	1	0	$m_6 = x_1x_2\overline{x}_3$	$M_6 = \overline{x}_1 + \overline{x}_2 + x_3$
7	1	1	1	$m_7 = x_1x_2x_3$	$M_7 = \overline{x}_1 + \overline{x}_2 + \overline{x}_3$

[Figure 2.22 from the textbook]

Minterms and Maxterms (with three variables)

Row number	x_1	x_2	x_3	Minterm	Maxterm
0	0	0	0	$m_0 = \overline{x}_1\overline{x}_2\overline{x}_3$	$M_0 = x_1 + x_2 + x_3$
1	0	0	1	$m_1 = \overline{x}_1\overline{x}_2x_3$	$M_1 = x_1 + x_2 + \overline{x}_3$
2	0	1	0	$m_2 = \overline{x}_1x_2\overline{x}_3$	$M_2 = x_1 + \overline{x}_2 + x_3$
3	0	1	1	$m_3 = \overline{x}_1x_2x_3$	$M_3 = x_1 + \overline{x}_2 + \overline{x}_3$
4	1	0	0	$m_4 = x_1\overline{x}_2\overline{x}_3$	$M_4 = \overline{x}_1 + x_2 + x_3$
5	1	0	1	$m_5 = x_1\overline{x}_2x_3$	$M_5 = \overline{x}_1 + x_2 + \overline{x}_3$
6	1	1	0	$m_6 = x_1x_2\overline{x}_3$	$M_6 = \overline{x}_1 + \overline{x}_2 + x_3$
7	1	1	1	$m_7 = x_1x_2x_3$	$M_7 = \overline{x}_1 + \overline{x}_2 + \overline{x}_3$

The function is 1 for these rows

Minterms and Maxterms (with three variables)

Row number	x_1	x_2	x_3	Minterm	Maxterm
0	0	0	0	$m_0 = \overline{x}_1\overline{x}_2\overline{x}_3$	$M_0 = x_1 + x_2 + x_3$
1	0	0	1	$m_1 = \overline{x}_1\overline{x}_2x_3$	$M_1 = x_1 + x_2 + \overline{x}_3$
2	0	1	0	$m_2 = \overline{x}_1x_2\overline{x}_3$	$M_2 = x_1 + \overline{x}_2 + x_3$
3	0	1	1	$m_3 = \overline{x}_1x_2x_3$	$M_3 = x_1 + \overline{x}_2 + \overline{x}_3$
4	1	0	0	$m_4 = x_1\overline{x}_2\overline{x}_3$	$M_4 = \overline{x}_1 + x_2 + x_3$
5	1	0	1	$m_5 = x_1\overline{x}_2x_3$	$M_5 = \overline{x}_1 + x_2 + \overline{x}_3$
6	1	1	0	$m_6 = x_1x_2\overline{x}_3$	$M_6 = \overline{x}_1 + \overline{x}_2 + x_3$
7	1	1	1	$m_7 = x_1x_2x_3$	$M_7 = \overline{x}_1 + \overline{x}_2 + \overline{x}_3$

The function is 1 for these rows

The function is 0 for these rows

Two different ways to specify the same function f of three variables

$$f(x_1, x_2, x_3) = \Sigma\, m(0, 2, 4, 5, 6, 7)$$

$$f(x_1, x_2, x_3) = \Pi\, M(1, 3)$$

Two different ways to specify the same function f of three variables

$$f(x_1, x_2, x_3) = \Sigma\, m(0, 2, 4, 5, 6, 7)$$

$$f(x_1, x_2, x_3) = \Pi\, M(1, 3)$$

$$= M_1 \bullet M_3$$

$$= (x_1 + x_2 + \overline{x_3}) \bullet (x_1 + \overline{x_2} + \overline{x_3})$$

The Minimum POS Expression

$$f(x_1, x_2, x_3) = (x_1 + x_2 + \overline{x_3}) \bullet (x_1 + \overline{x_2} + \overline{x_3})$$

$$= (x_1 + \overline{x_3} + x_2) \bullet (x_1 + \overline{x_3} + \overline{x_2})$$

$$= (x_1 + \overline{x_3})$$

Hint: Use the following Boolean Algebra theorem

14b. $(x + y) \bullet (x + \overline{y}) = x$

Alternative Solution Using K-Maps

x_1	x_2	x_3	
0	0	0	m_0
0	0	1	m_1
0	1	0	m_2
0	1	1	m_3
1	0	0	m_4
1	0	1	m_5
1	1	0	m_6
1	1	1	m_7

(a) Truth table

x_3 \ $x_1 x_2$	00	01	11	10
0	m_0	m_2	m_6	m_4
1	m_1	m_3	m_7	m_5

(b) Karnaugh map

Alternative Solution Using K-Maps

x_1	x_2	x_3	
0	0	0	m_0
0	0	1	m_1
0	1	0	m_2
0	1	1	m_3
1	0	0	m_4
1	0	1	m_5
1	1	0	m_6
1	1	1	m_7

(a) Truth table

x_3 \ $x_1 x_2$	00	01	11	10
0	m_0	m_2	m_6	m_4
1	m_1	m_3	m_7	m_5

(b) Karnaugh map

Alternative Solution Using K-Maps

x_1	x_2	x_3	
0	0	0	m_0
0	0	1	m_1
0	1	0	m_2
0	1	1	m_3
1	0	0	m_4
1	0	1	m_5
1	1	0	m_6
1	1	1	m_7

(a) Truth table

x_3 \ x_1x_2	00	01	11	10
0	m_0	m_2	m_6	m_4
1	m_1	m_3	m_7	m_5

(b) Karnaugh map

Alternative Solution Using K-Maps

x_3 \ x_1x_2	00	01	11	10
0	m_0	m_2	m_6	m_4
1	m_1	m_3	m_7	m_5

Alternative Solution Using K-Maps

x_3 \ x_1x_2	00	01	11	10
0	1	1	1	1
1	0	0	1	1

Alternative Solution Using K-Maps

x_3 \ x_1x_2	00	01	11	10
0	1	1	1	1
1	0	0	1	1

$$(x_1 + \overline{x}_3)$$

Example 3

Problem: A circuit that controls a given digital system has three inputs: x_1, x_2, and x_3. It has to recognize three different conditions:

- Condition A is true if x_3 is true and either x_1 is true or x_2 is false
- Condition B is true if x_1 is true and either x_2 or x_3 is false
- Condition C is true if x_2 is true and either x_1 is true or x_3 is false

The control circuit must produce an output of 1 if at least two of the conditions A, B, and C are true. Design the simplest circuit that can be used for this purpose.

Condition A

Condition A is true if x_3 is true and either x_1 is true or x_2 is false

Condition A

Condition A is true if x_3 is true and either x_1 is true or x_2 is false

$$A = x_3(x_1 + \bar{x}_2) \;=\; x_3x_1 + x_3\bar{x}_2$$

Condition B

Condition B is true if x_1 is true and either x_2 or x_3 is false

Condition B

Condition B is true if x_1 is true and either x_2 or x_3 is false

$$B = x_1(\overline{x}_2 + \overline{x}_3) \;=\; x_1\overline{x}_2 + x_1\overline{x}_3$$

Condition C

Condition C is true if x_2 is true and either x_1 is true or x_3 is false

Condition C

Condition C is true if x_2 is true and either x_1 is true or x_3 is false

$$C = x_2(x_1 + \overline{x}_3) \;=\; x_2x_1 + x_2\overline{x}_3$$

The output of the circuit can be expressed as

f = AB + AC + BC

$$
\begin{aligned}
AB &= (x_3x_1 + x_3\overline{x}_2)(x_1\overline{x}_2 + x_1\overline{x}_3) \\
&= x_3x_1x_1\overline{x}_2 + x_3x_1x_1\overline{x}_3 + x_3\overline{x}_2x_1\overline{x}_2 + x_3\overline{x}_2x_1\overline{x}_3 \\
&= x_3x_1\overline{x}_2 + 0 + x_3\overline{x}_2x_1 + 0 \\
&= x_1\overline{x}_2x_3
\end{aligned}
$$

The output of the circuit can be expressed as

f = AB + AC + BC

$$
\begin{aligned}
AC &= (x_3x_1 + x_3\overline{x}_2)(x_2x_1 + x_2\overline{x}_3) \\
&= x_3x_1x_2x_1 + x_3x_1x_2\overline{x}_3 + x_3\overline{x}_2x_2x_1 + x_3\overline{x}_2x_2\overline{x}_3 \\
&= x_3x_1x_2 + 0 + 0 + 0 \\
&= x_1x_2x_3
\end{aligned}
$$

The output of the circuit can be expressed as

f = AB + AC + BC

$$
\begin{aligned}
BC &= (x_1\bar{x}_2 + x_1\bar{x}_3)(x_2x_1 + x_2\bar{x}_3) \\
&= x_1\bar{x}_2x_2x_1 + x_1\bar{x}_2x_2\bar{x}_3 + x_1\bar{x}_3x_2x_1 + x_1\bar{x}_3x_2\bar{x}_3 \\
&= 0 + 0 + x_1\bar{x}_3x_2 + x_1\bar{x}_3x_2 \\
&= x_1x_2\bar{x}_3
\end{aligned}
$$

Finally, we get

$$
\begin{aligned}
f &= x_1\bar{x}_2x_3 + x_1x_2x_3 + x_1x_2\bar{x}_3 \\
&= x_1(\bar{x}_2 + x_2)x_3 + x_1x_2(x_3 + \bar{x}_3) \\
&= x_1x_3 + x_1x_2 \\
&= x_1(x_3 + x_2)
\end{aligned}
$$

Example 4

Solve the previous problem using Venn diagrams.

Venn Diagrams
(find the areas that are shaded at least two times)

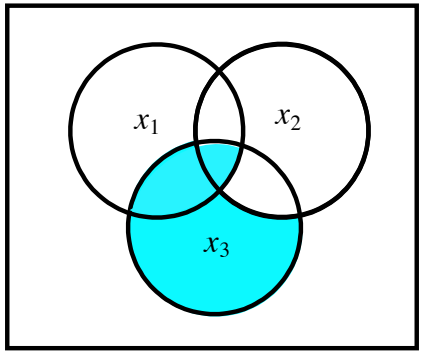

(a) Function *A:*

$$x_3x_1 + x_3\overline{x}_2$$

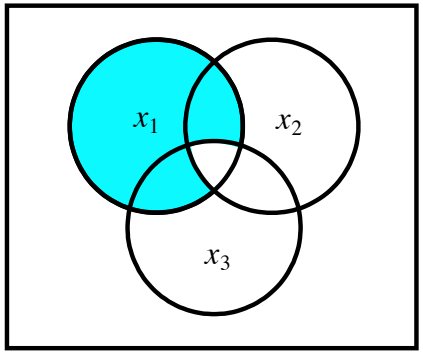

(b) Function *B*

$$x_1\overline{x}_2 + x_1\overline{x}_3$$

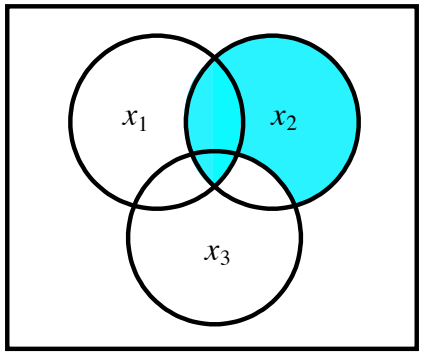

(c) Function *C*

$$x_2x_1 + x_2\overline{x}_3$$

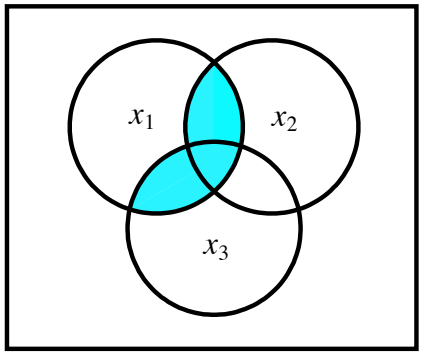

(d) Function *f*

$$x_1(x_3 + x_2)$$

[Figure 2.66 from the textbook]

Example 5

Design the minimum-cost SOP and POS expression for the function

$$f(x_1, x_2, x_3, x_4) = \Sigma\, m(4, 6, 8, 10, 11, 12, 15) + D(3, 5, 7, 9)$$

Let's Use a K-Map

$$f(x_1, x_2, x_3, x_4) = \Sigma\, m(4, 6, 8, 10, 11, 12, 15) + D(3, 5, 7, 9)$$

$x_3 x_4$ \ $x_1 x_2$	00	01	11	10
00	m_0	m_4	m_{12}	m_8
01	m_1	m_5	m_{13}	m_9
11	m_3	m_7	m_{15}	m_{11}
10	m_2	m_6	m_{14}	m_{10}

x_1

x_2

x_3

x_4

Let's Use a K-Map

$$f(x_1, x_2, x_3, x_4) = \Sigma\, m(4, 6, 8, 10, 11, 12, 15) + D(3, 5, 7, 9)$$

$x_3 x_4$ \ $x_1 x_2$	00	01	11	10
00	0	1	1	1
01	0	d	0	d
11	d	d	1	1
10	0	1	0	1

x_1

x_4

x_3

x_2

Let's Use a K-Map

$$f(x_1, x_2, x_3, x_4) = \Sigma\, m(4, 6, 8, 10, 11, 12, 15) + D(3, 5, 7, 9)$$

$x_3 x_4$ \ $x_1 x_2$	00	01	11	10
00	0	1	1	1
01	0	d	0	d
11	d	d	1	1
10	0	1	0	1

x_1

x_2

x_3

x_4

Let's Use a K-Map

$$f(x_1, x_2, x_3, x_4) = \Sigma\, m(4, 6, 8, 10, 11, 12, 15) + D(3, 5, 7, 9)$$

$x_3 x_4$ \ $x_1 x_2$	00	01	11	10
00	0	1	1	1
01	0	d	0	d
11	d	d	1	1
10	0	1	0	1

x_1

x_2

x_3

x_4

Let's Use a K-Map

$$f(x_1, x_2, x_3, x_4) = \Sigma\, m(4, 6, 8, 10, 11, 12, 15) + D(3, 5, 7, 9)$$

$x_3 x_4$ \ $x_1 x_2$	00	01	11	10
00	0	1	1	1
01	0	d	0	d
11	d	d	1	1
10	0	1	0	1

x_1 x_2 x_3 x_4

Two Alternative Solutions

$$f(x_1, x_2, x_3, x_4) = \Sigma\, m(4, 6, 8, 10, 11, 12, 15) + D(3, 5, 7, 9)$$

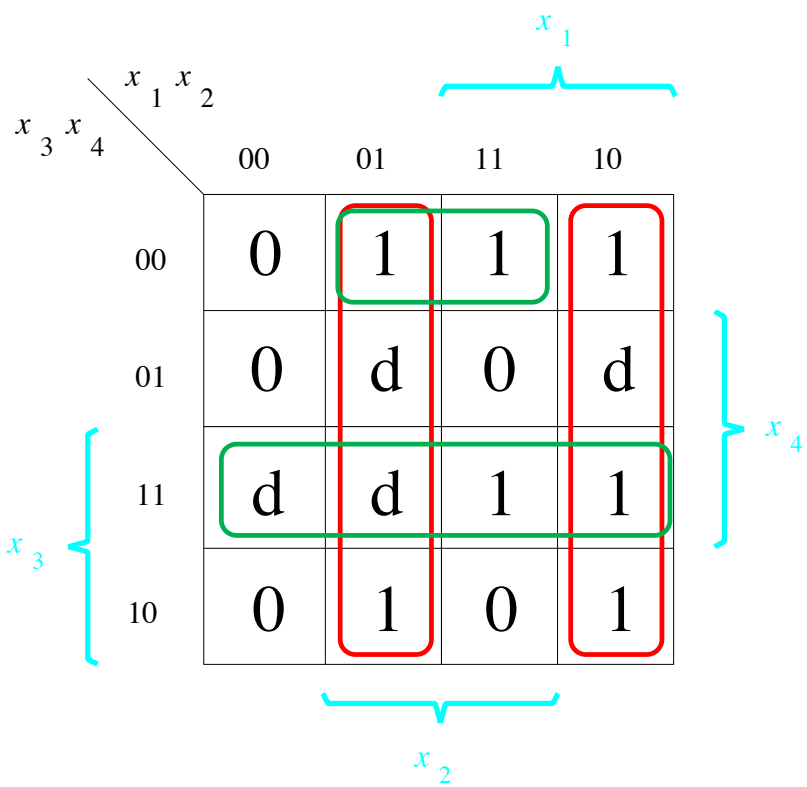

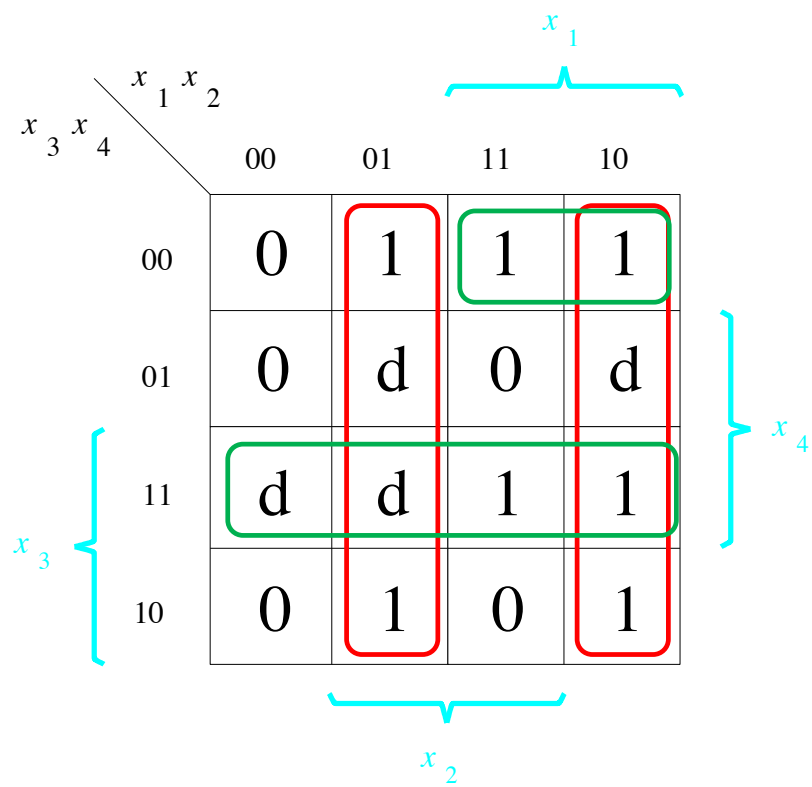

The SOP Expression

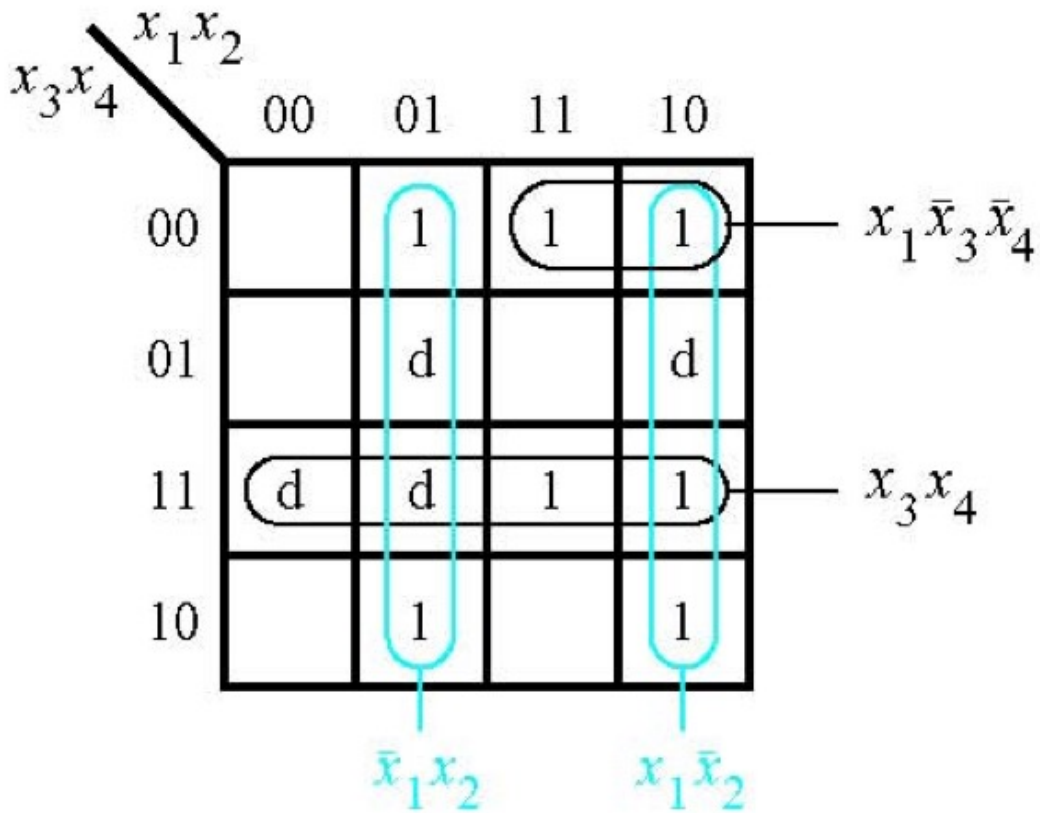

$$f = \bar{x}_1 x_2 + x_1 \bar{x}_2 + x_1 \bar{x}_3 \bar{x}_4 + x_3 x_4$$

[Figure 2.67a from the textbook]

What about the POS Expression?

$$f(x_1, x_2, x_3, x_4) = \Sigma\, m(4, 6, 8, 10, 11, 12, 15) + D(3, 5, 7, 9)$$

$x_3 x_4$ \ $x_1 x_2$	00	01	11	10
00	0	1	1	1
01	0	d	0	d
11	d	d	1	1
10	0	1	0	1

x_1

x_4

x_3

x_2

What about the POS Expression?

$$f(x_1, x_2, x_3, x_4) = \Sigma\, m(4, 6, 8, 10, 11, 12, 15) + D(3, 5, 7, 9)$$

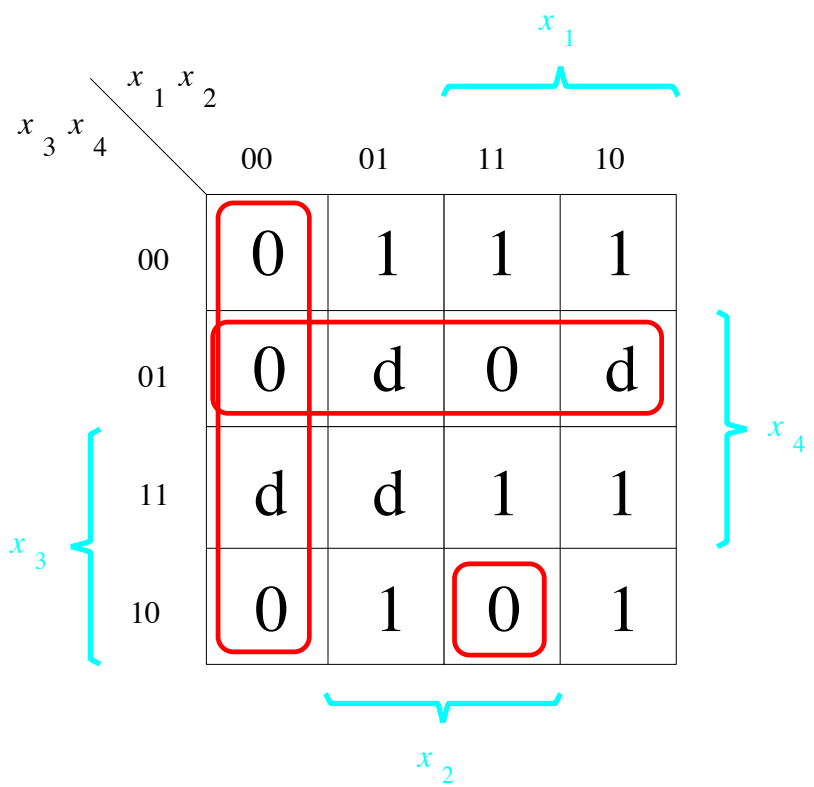

The POS Expression

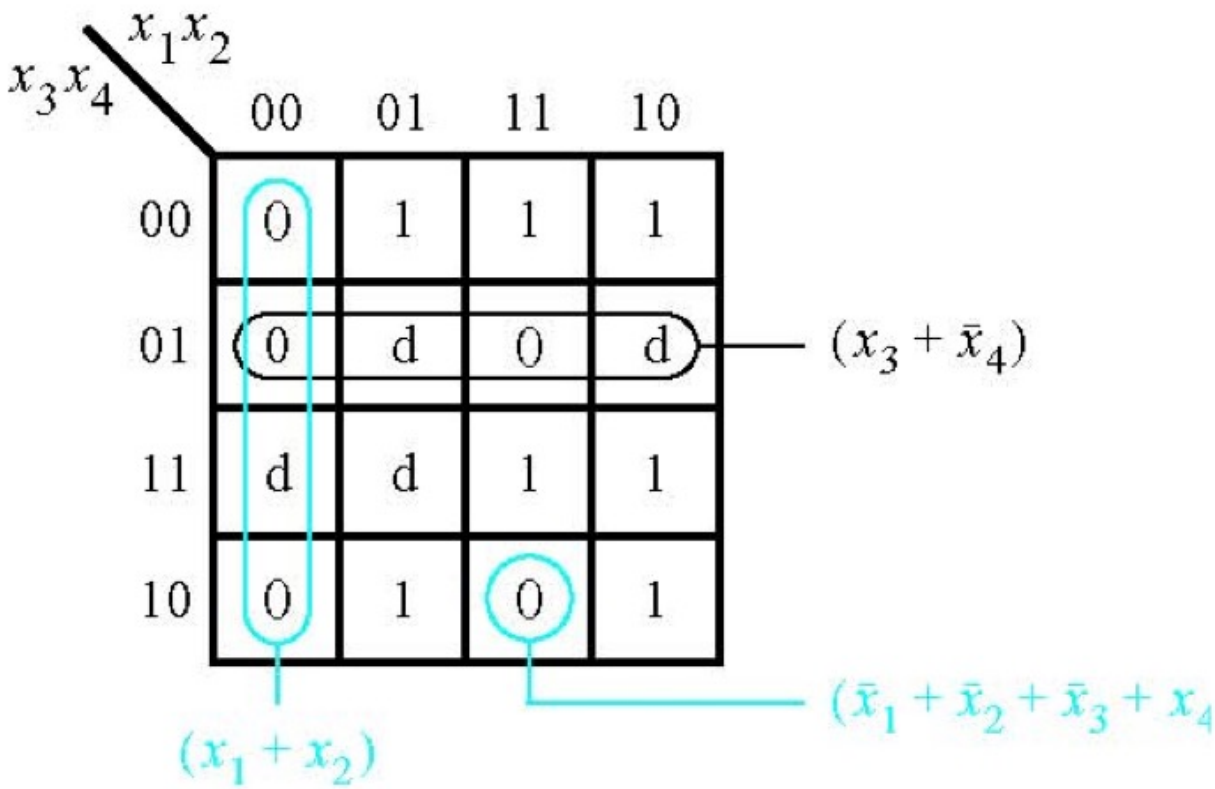

$$f = (x_1 + x_2)\bullet(x_3 + \overline{x}_4)\bullet(\overline{x}_1 + \overline{x}_2 + \overline{x}_3 + x_4)$$

[Figure 2.67b from the textbook]

Example 6

Use K-maps to find the minimum-cost SOP and POS expression for the function

$$f(x_1, \ldots, x_4) = \overline{x}_1\overline{x}_3\overline{x}_4 + x_3x_4 + \overline{x}_1\overline{x}_2x_4 + x_1x_2\overline{x}_3x_4$$

assuming that there are also don't-cares defined as $D = \sum(9, 12, 14)$.

Let's map the expression to the K-Map

$$f(x_1, \ldots, x_4) = \bar{x}_1\bar{x}_3\bar{x}_4 + x_3x_4 + \bar{x}_1\bar{x}_2x_4 + x_1x_2\bar{x}_3x_4$$

$$D = \sum(9, 12, 14).$$

$x_3 x_4$ \ $x_1 x_2$	00	01	11	10
00	m_0	m_4	m_{12}	m_8
01	m_1	m_5	m_{13}	m_9
11	m_3	m_7	m_{15}	m_{11}
10	m_2	m_6	m_{14}	m_{10}

x_1 x_2 x_3 x_4

Let's map the expression to the K-Map

$$f(x_1, \ldots, x_4) = \bar{x}_1\bar{x}_3\bar{x}_4 + x_3x_4 + \bar{x}_1\bar{x}_2x_4 + x_1x_2\bar{x}_3x_4$$

$$D = \sum(9, 12, 14).$$

x_3x_4 \ x_1x_2	00	01	11	10
00	m_0	m_4	d	m_8
01	m_1	m_5	m_{13}	d
11	m_3	m_7	m_{15}	m_{11}
10	m_2	m_6	d	m_{10}

x_1 x_2 x_3 x_4

Let's map the expression to the K-Map

$$f(x_1, \ldots, x_4) = \bar{x}_1\bar{x}_3\bar{x}_4 + x_3x_4 + \bar{x}_1\bar{x}_2x_4 + x_1x_2\bar{x}_3x_4$$

x_3x_4 \ x_1x_2	00	01	11	10
00	m_0	m_4	d	m_8
01	m_1	m_5	m_{13}	d
11	m_3	m_7	m_{15}	m_{11}
10	m_2	m_6	d	m_{10}

x_1 x_2 x_3 x_4

Let's map the expression to the K-Map

$$f(x_1, \ldots, x_4) = \boxed{\bar{x}_1\bar{x}_3\bar{x}_4} + x_3x_4 + \bar{x}_1\bar{x}_2x_4 + x_1x_2\bar{x}_3x_4$$

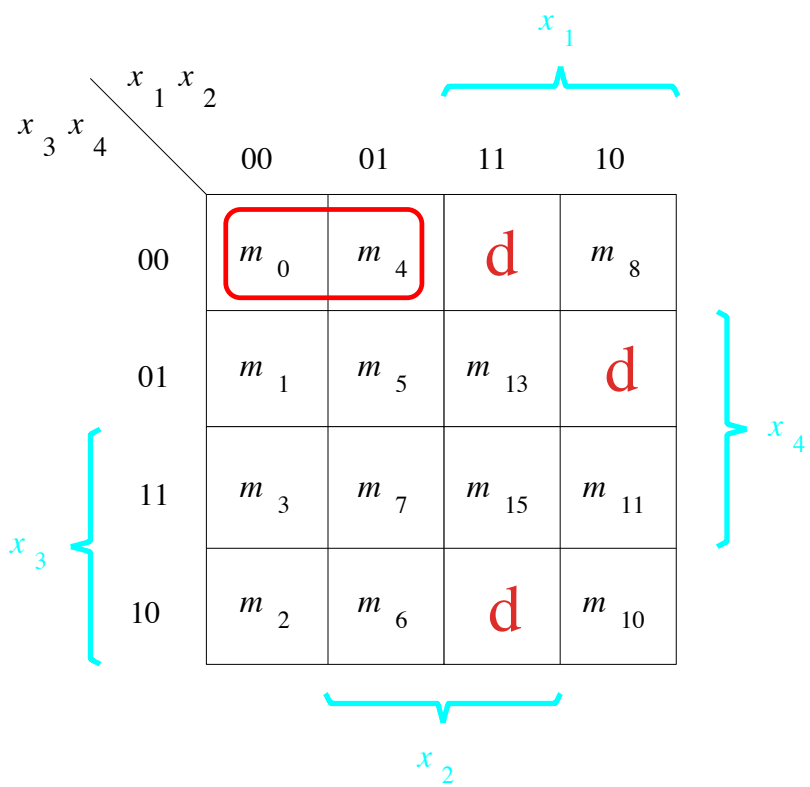

Let's map the expression to the K-Map

$$f(x_1, \ldots, x_4) = \bar{x}_1\bar{x}_3\bar{x}_4 + \boxed{x_3x_4} + \bar{x}_1\bar{x}_2x_4 + x_1x_2\bar{x}_3x_4$$

x_3x_4 \ x_1x_2	00	01	11	10
00	m_0	m_4	d	m_8
01	m_1	m_5	m_{13}	d
11	m_3	m_7	m_{15}	m_{11}
10	m_2	m_6	d	m_{10}

x_1 x_2 x_3 x_4

Let's map the expression to the K-Map

$$f(x_1, \ldots, x_4) = \bar{x}_1\bar{x}_3\bar{x}_4 + x_3x_4 + \boxed{\bar{x}_1\bar{x}_2x_4} + x_1x_2\bar{x}_3x_4$$

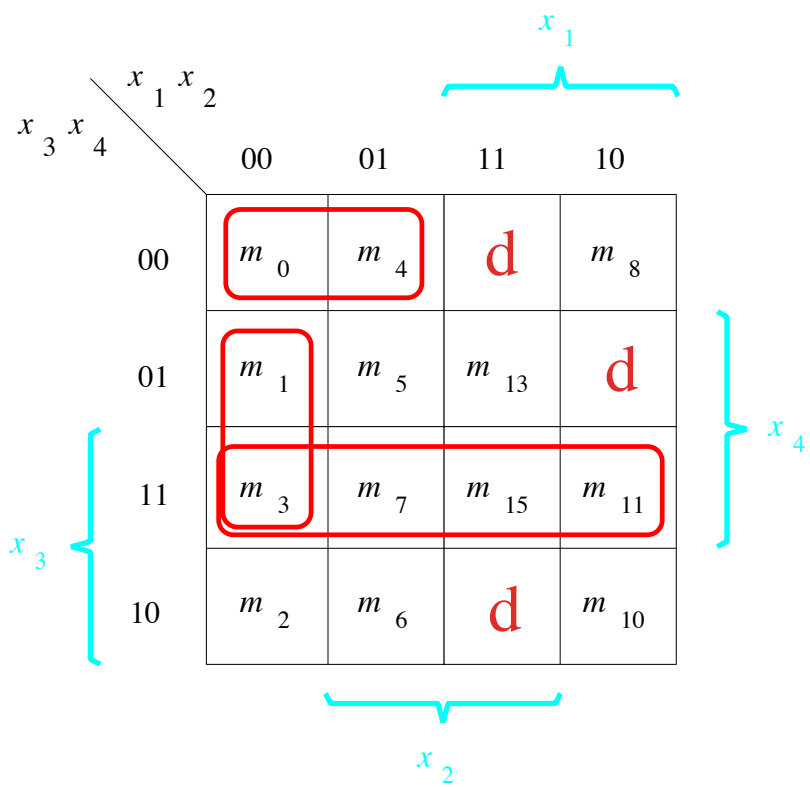

Let's map the expression to the K-Map

$$f(x_1, \ldots, x_4) = \bar{x}_1\bar{x}_3\bar{x}_4 + x_3x_4 + \bar{x}_1\bar{x}_2x_4 + \boxed{x_1x_2\bar{x}_3x_4}$$

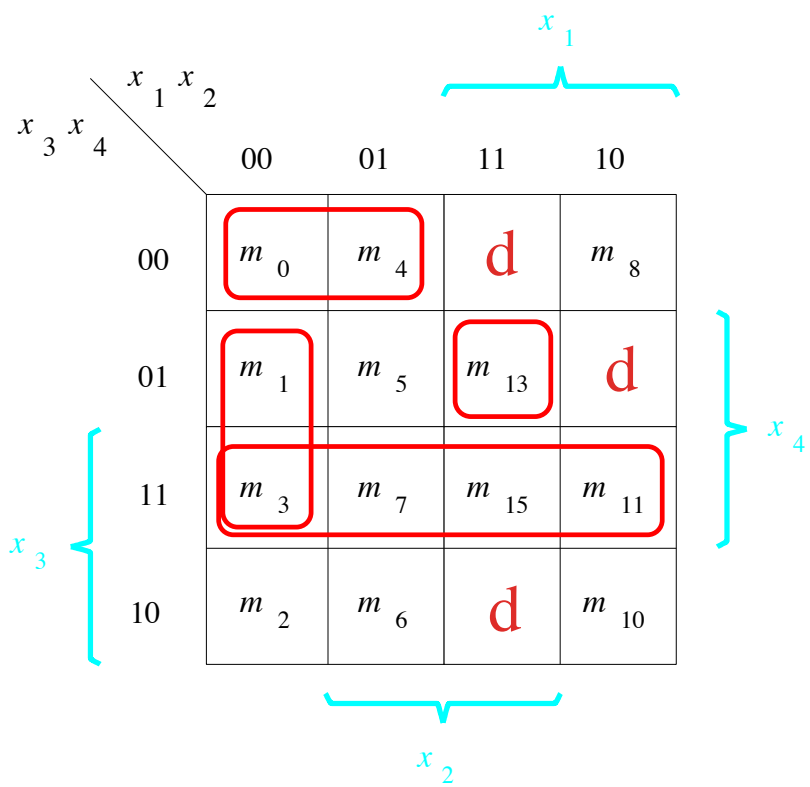

Let's map the expression to the K-Map

$$f(x_1, \ldots, x_4) = \bar{x}_1\bar{x}_3\bar{x}_4 + x_3x_4 + \bar{x}_1\bar{x}_2x_4 + x_1x_2\bar{x}_3x_4$$

x_3x_4 \ x_1x_2	00	01	11	10
00	1	1	d	0
01	1	0	1	d
11	1	1	1	1
10	0	0	d	0

x_1 x_2 x_3 x_4

Let's map the expression to the K-Map

$$f(x_1, \ldots, x_4) = \bar{x}_1\bar{x}_3\bar{x}_4 + x_3x_4 + \bar{x}_1\bar{x}_2x_4 + x_1x_2\bar{x}_3x_4$$

x_3x_4 \ x_1x_2	00	01	11	10
00	1	1	d	0
01	1	0	1	d
11	1	1	1	1
10	0	0	d	0

x_1

x_4

x_3

x_2

Let's map the expression to the K-Map

$$f(x_1, \ldots, x_4) = \bar{x}_1\bar{x}_3\bar{x}_4 + x_3x_4 + \bar{x}_1\bar{x}_2x_4 + x_1x_2\bar{x}_3x_4$$

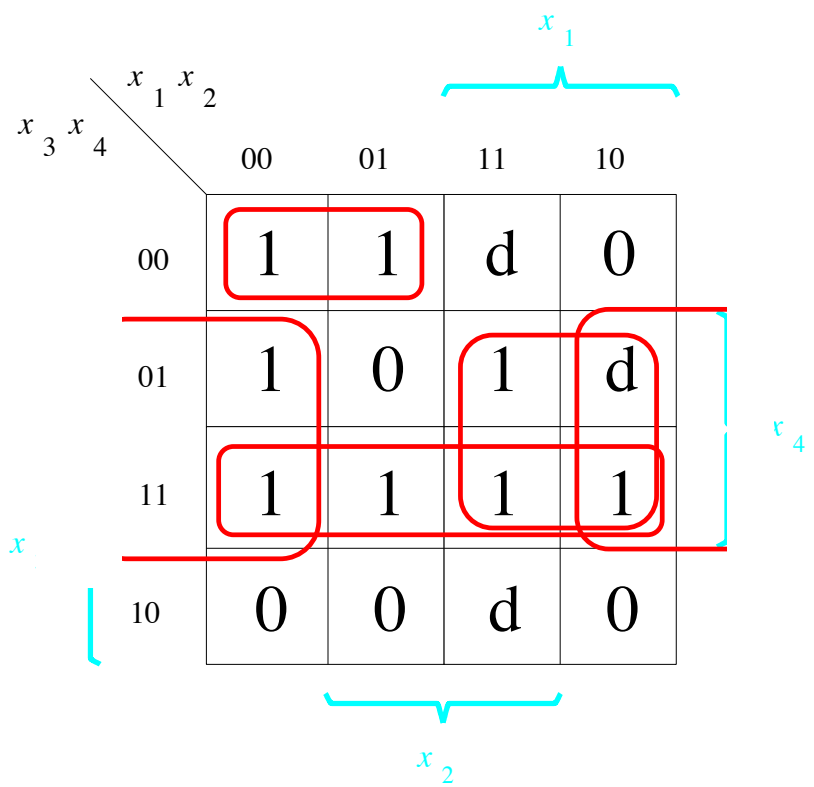

The SOP Expression

$$f(x_1, \ldots, x_4) = \bar{x}_1\bar{x}_3\bar{x}_4 + x_3x_4 + \bar{x}_1\bar{x}_2x_4 + x_1x_2\bar{x}_3x_4$$

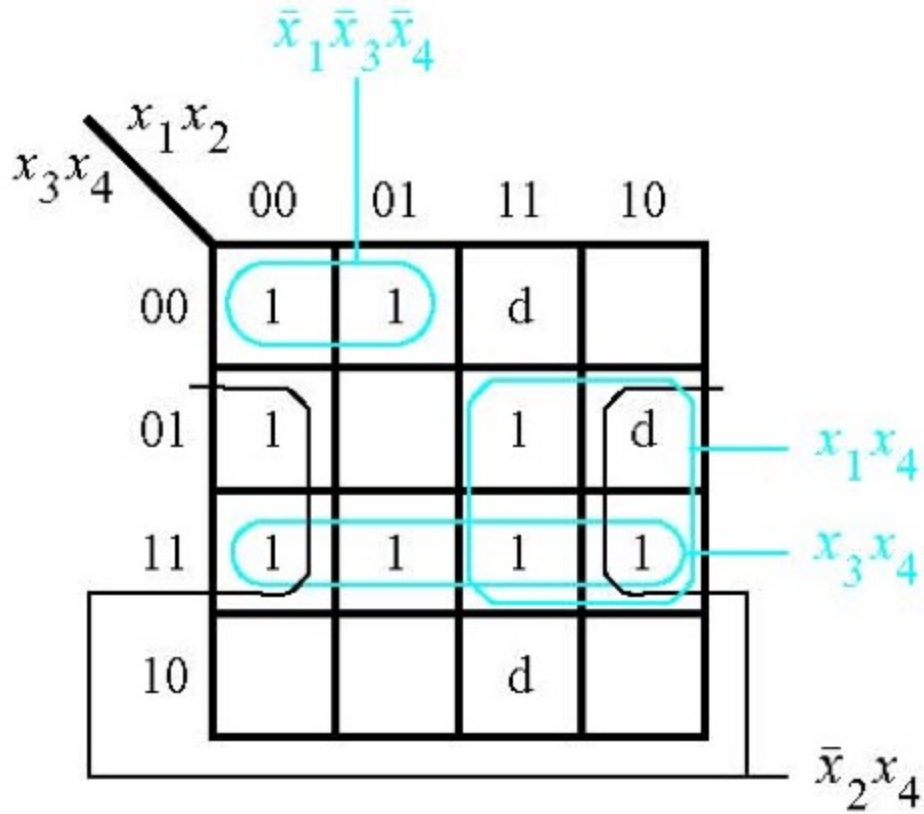

$$f = x_3x_4 + \bar{x}_1\bar{x}_3\bar{x}_4 + \bar{x}_2x_4 + x_1x_4$$

[Figure 2.68a from the textbook]

What about the POS Expression?

$x_3 x_4$ \ $x_1 x_2$	00	01	11	10
00	1	1	d	0
01	1	0	1	d
11	1	1	1	1
10	0	0	d	0

x_1

x_2

x_3

x_4

What about the POS Expression?

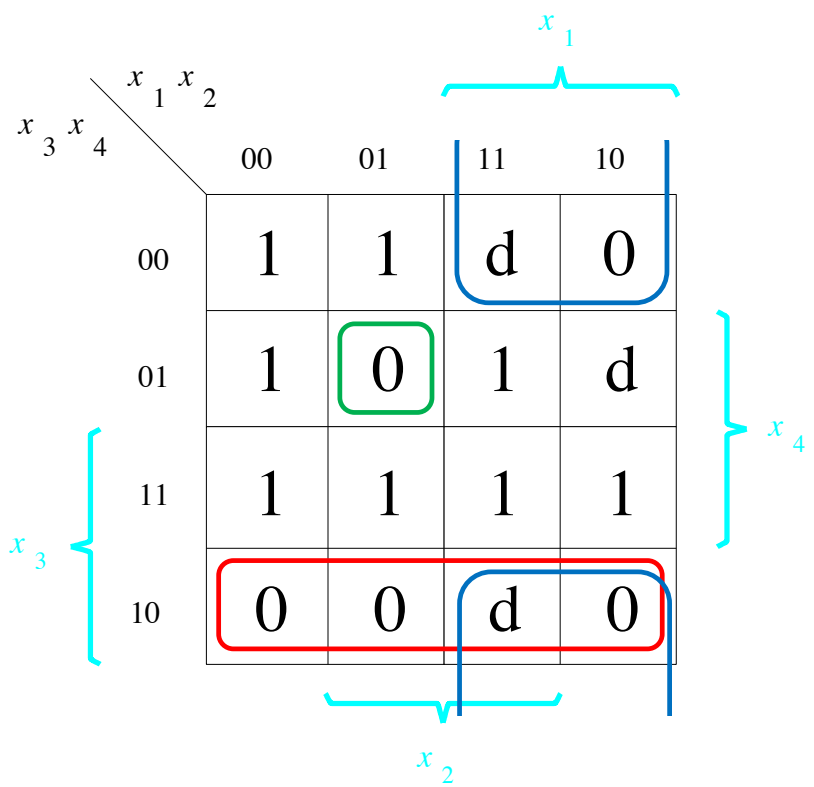

The POS Expression

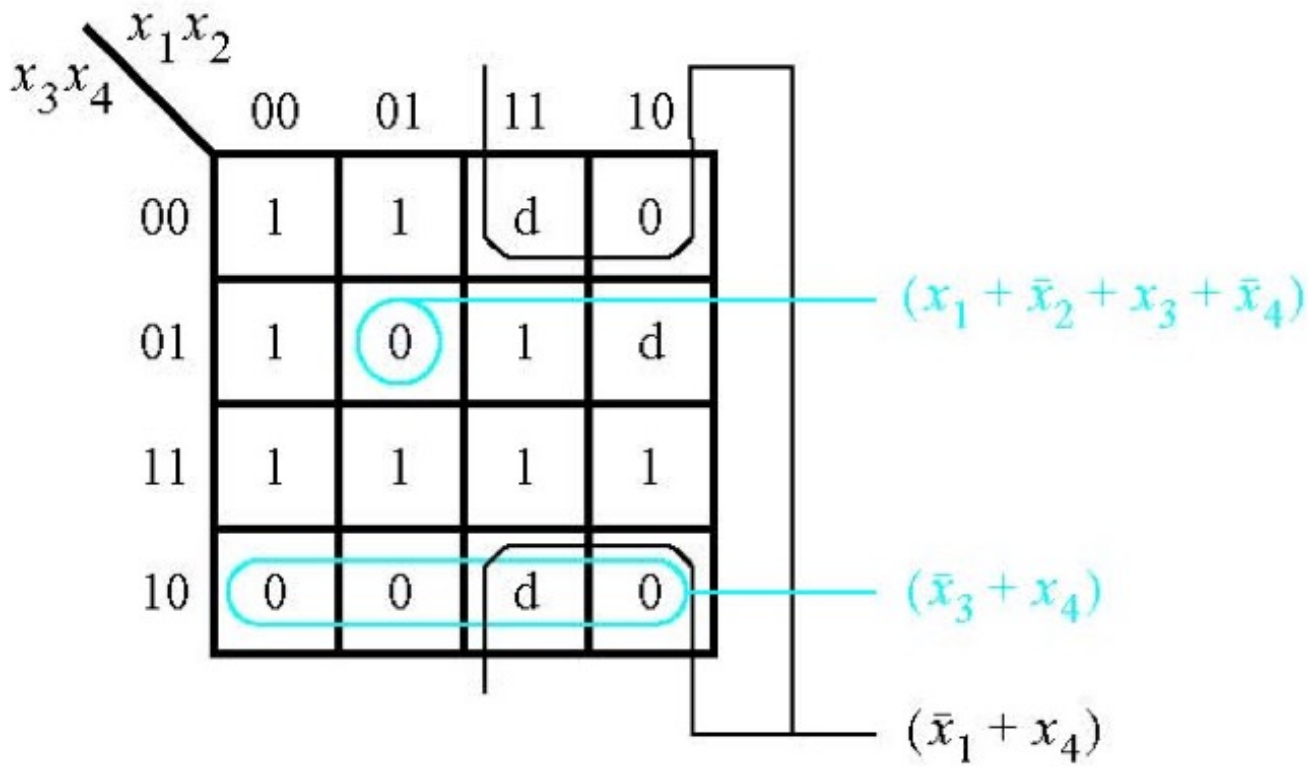

$$f = (\bar{x}_3 + x_4)(\bar{x}_1 + x_4)(x_1 + \bar{x}_2 + x_3 + \bar{x}_4)$$

[Figure 2.68b from the textbook]

Example 7

Derive the minimum-cost SOP expression for

$$f = s_3(\bar{s}_1 + \bar{s}_2) + s_1 s_2$$

First, expand the expression using property 12a

$$f = s_3(\bar{s}_1 + \bar{s}_2) + s_1 s_2$$

$$f = \bar{s}_1 s_3 + \bar{s}_2 s_3 + s_1 s_2$$

Construct the K-Map for this expression

$$f = \bar{s}_1 s_3 + \bar{s}_2 s_3 + s_1 s_2$$

s_1	s_2	s_3	
0	0	0	m_0
0	0	1	m_1
0	1	0	m_2
0	1	1	m_3
1	0	0	m_4
1	0	1	m_5
1	1	0	m_6
1	1	1	m_7

(a) Truth table

s_3 \ $s_1 s_2$	00	01	11	10
0	m_0	m_2	m_6	m_4
1	m_1	m_3	m_7	m_5

(b) Karnaugh map

Construct the K-Map for this expression

$$f = \boxed{\bar{s}_1 s_3} + \bar{s}_2 s_3 + s_1 s_2$$

s_1	s_2	s_3	
0	0	0	m_0
0	0	1	m_1
0	1	0	m_2
0	1	1	m_3
1	0	0	m_4
1	0	1	m_5
1	1	0	m_6
1	1	1	m_7

(a) Truth table

s_3 \ $s_1 s_2$	00	01	11	10
0	m_0	m_2	m_6	m_4
1	m_1	m_3	m_7	m_5

(b) Karnaugh map

Construct the K-Map for this expression

$$f = \bar{s}_1 s_3 + \boxed{\bar{s}_2 s_3} + s_1 s_2$$

s_1	s_2	s_3	
0	0	0	m_0
0	0	1	m_1
0	1	0	m_2
0	1	1	m_3
1	0	0	m_4
1	0	1	m_5
1	1	0	m_6
1	1	1	m_7

(a) Truth table

s_3 \ $s_1 s_2$	00	01	11	10
0	m_0	m_2	m_6	m_4
1	m_1	m_3	m_7	m_5

(b) Karnaugh map

Construct the K-Map for this expression

$$f = \bar{s}_1 s_3 + \bar{s}_2 s_3 + \boxed{s_1 s_2}$$

s_1	s_2	s_3	
0	0	0	m_0
0	0	1	m_1
0	1	0	m_2
0	1	1	m_3
1	0	0	m_4
1	0	1	m_5
1	1	0	m_6
1	1	1	m_7

(a) Truth table

s_3 \ $s_1 s_2$	00	01	11	10
0	m_0	m_2	m_6	m_4
1	m_1	m_3	m_7	m_5

(b) Karnaugh map

Construct the K-Map for this expression

$$f = \bar{s}_1 s_3 + \bar{s}_2 s_3 + s_1 s_2$$

s_1	s_2	s_3	
0	0	0	0
0	0	1	1
0	1	0	0
0	1	1	1
1	0	0	0
1	0	1	1
1	1	0	1
1	1	1	1

(a) Truth table

s_3 \ $s_1 s_2$	00	01	11	10
0	0	0	1	0
1	1	1	1	1

(b) Karnaugh map

Construct the K-Map for this expression

$$f = \bar{s}_1 s_3 + \bar{s}_2 s_3 + s_1 s_2$$

s_1	s_2	s_3	
0	0	0	0
0	0	1	1
0	1	0	0
0	1	1	1
1	0	0	0
1	0	1	1
1	1	0	1
1	1	1	1

(a) Truth table

s_3 \ $s_1 s_2$	00	01	11	10
0	0	0	1	0
1	1	1	1	1

(b) Karnaugh map

Simplified Expression: $f = s_3 + s_1 s_2$

Construct the K-Map for this expression

$$f = \bar{s}_1 s_3 + \bar{s}_2 s_3 + s_1 s_2$$

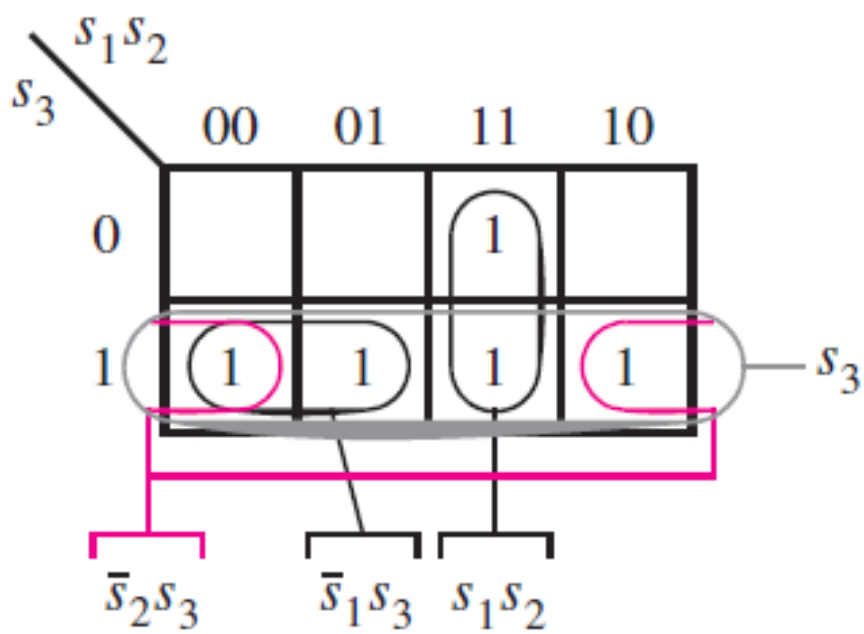

[Figure 2.69 from the textbook]

Construct the K-Map for this expression

$$f = \bar{s}_1 s_3 + \bar{s}_2 s_3 + s_1 s_2$$

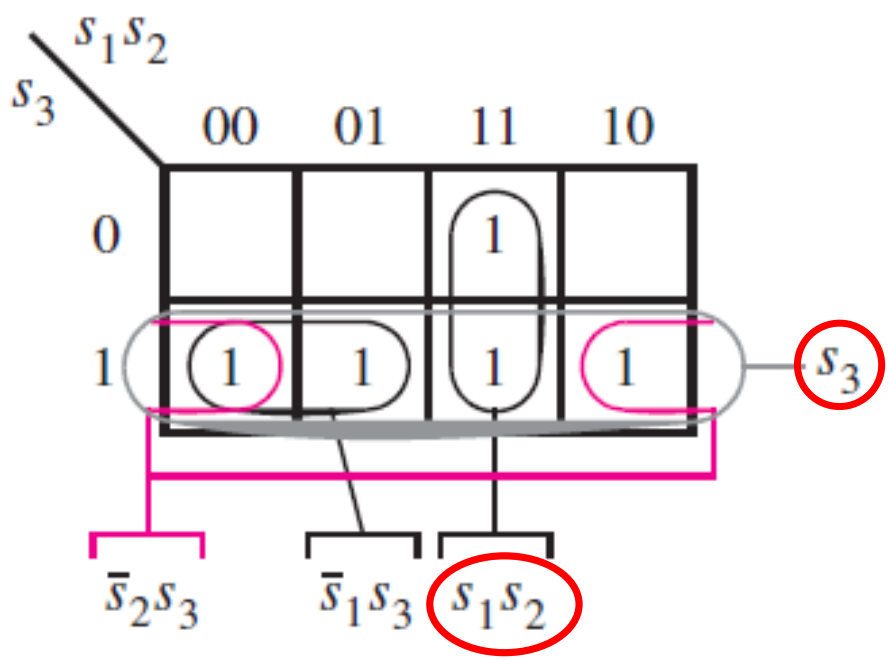

Simplified Expression: $f = s_3 + s_1 s_2$

[Figure 2.69 from the textbook]

Example 8

Write the Verilog code for the following circuit …

Logic Circuit

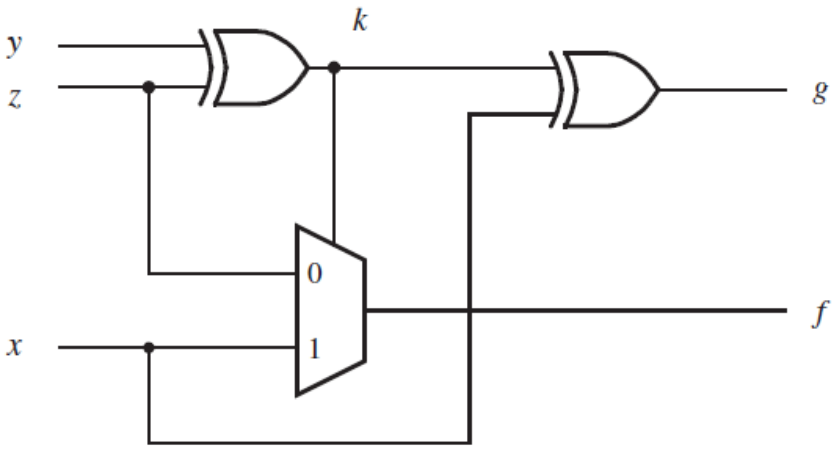

[Figure 2.70 from the textbook]

Circuit for 2-1 Multiplexer

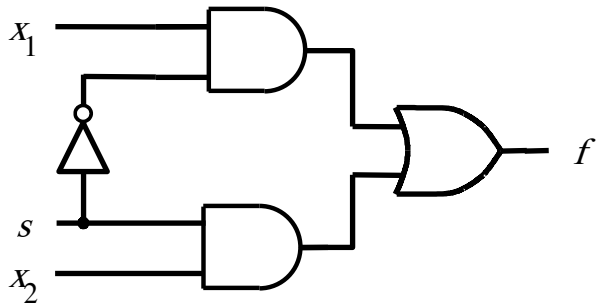

(b) Circuit

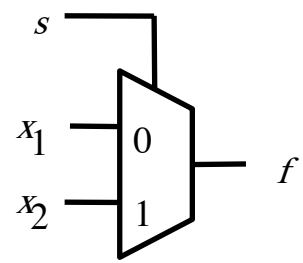

(c) Graphical symbol

$$f(s, x_1, x_2) = \overline{s}\, x_1 + s\, x_2$$

[Figure 2.33b-c from the textbook]

Logic Circuit vs Verilog Code

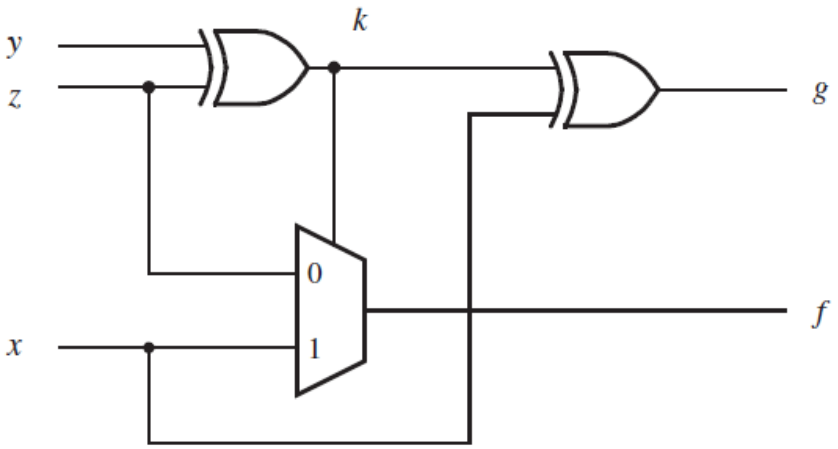


```
module  f_g (x, y, z, f, g);
    input x, y, z;
    output f, g;
    wire k;

    assign k = y ^ z;
    assign g = k ^ x;
    assign f = (~k & z) | (k & x);

endmodule
```

[Figure 2.70 from the textbook]

[Figure 2.71 from the textbook]

Example 9

Write the Verilog code for the following circuit …

The Logic Circuit for this Example

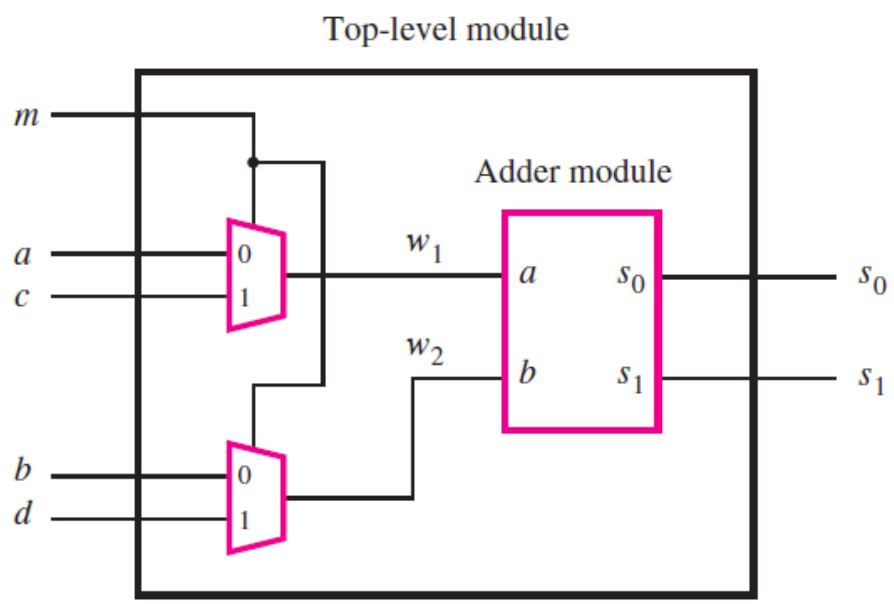

[Figure 2.72 from the textbook]

Circuit for 2-1 Multiplexer

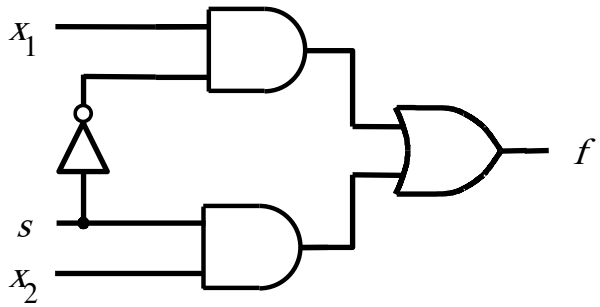

(b) Circuit

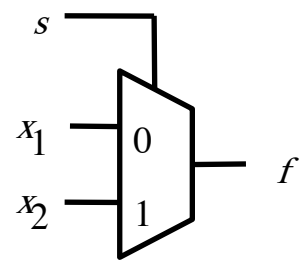

(c) Graphical symbol

$$f(s, x_1, x_2) = \overline{s}\, x_1 + s\, x_2$$

[Figure 2.33b-c from the textbook]

Addition of Binary Numbers

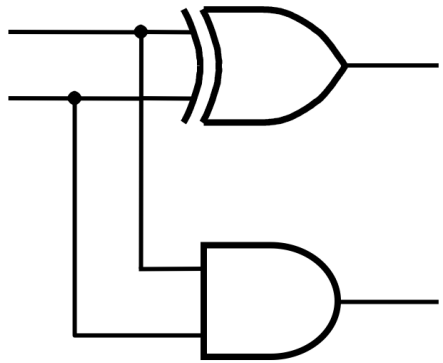

a	b	s_1	s_0
0	0	0	0
0	1	0	1
1	0	0	1
1	1	1	0

Logic Circuit vs Verilog Code

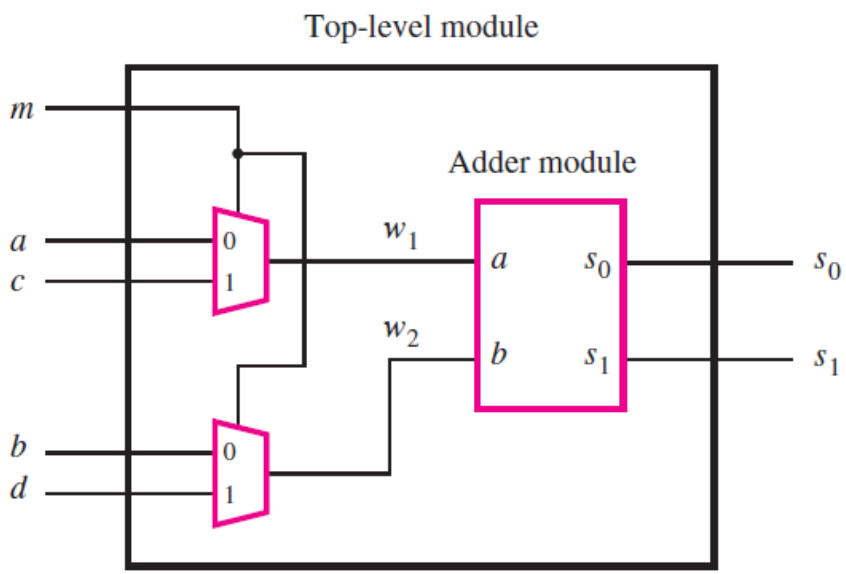


```
module shared (a, b, c, d, m, s1, s0);
    input a, b, c, d, m;
    output s1, s0;
    wire w1, w2;
    mux2to1 U1 (a, c, m, w1);
    mux2to1 U2 (b, d, m, w2);
    adder U3 (w1, w2, s1, s0);
endmodule

module mux2to1 (x1, x2, s, f);
    input x1, x2, s;
    output f;
    assign f = (~s & x1) | (s & x2);
endmodule

module adder (a, b, s1, s0);
    input a, b;
    output s1, s0;
    assign s1 = a & b;
    assign s0 = a ^ b;
endmodule
```

[Figure 2.73 from the textbook]

Some material form Appendix B

Programmable Logic Array (PLA)

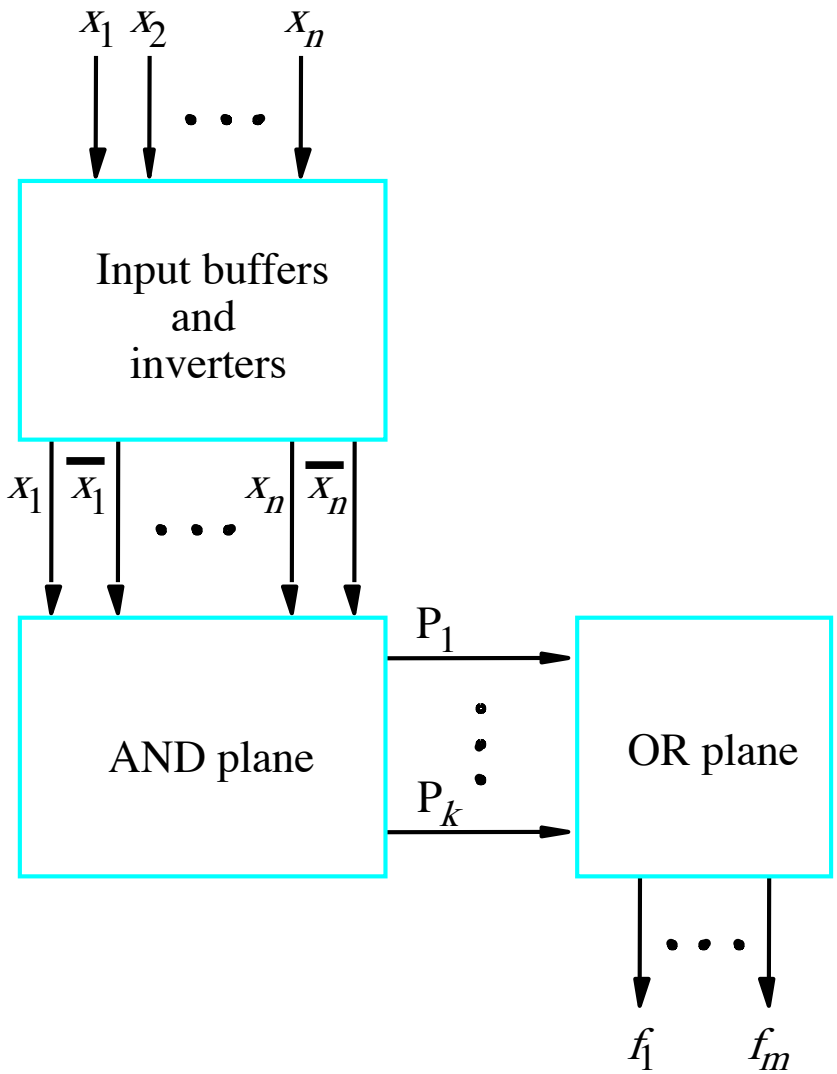

[Figure B.25 from textbook]

Gate-Level Diagram of a PLA

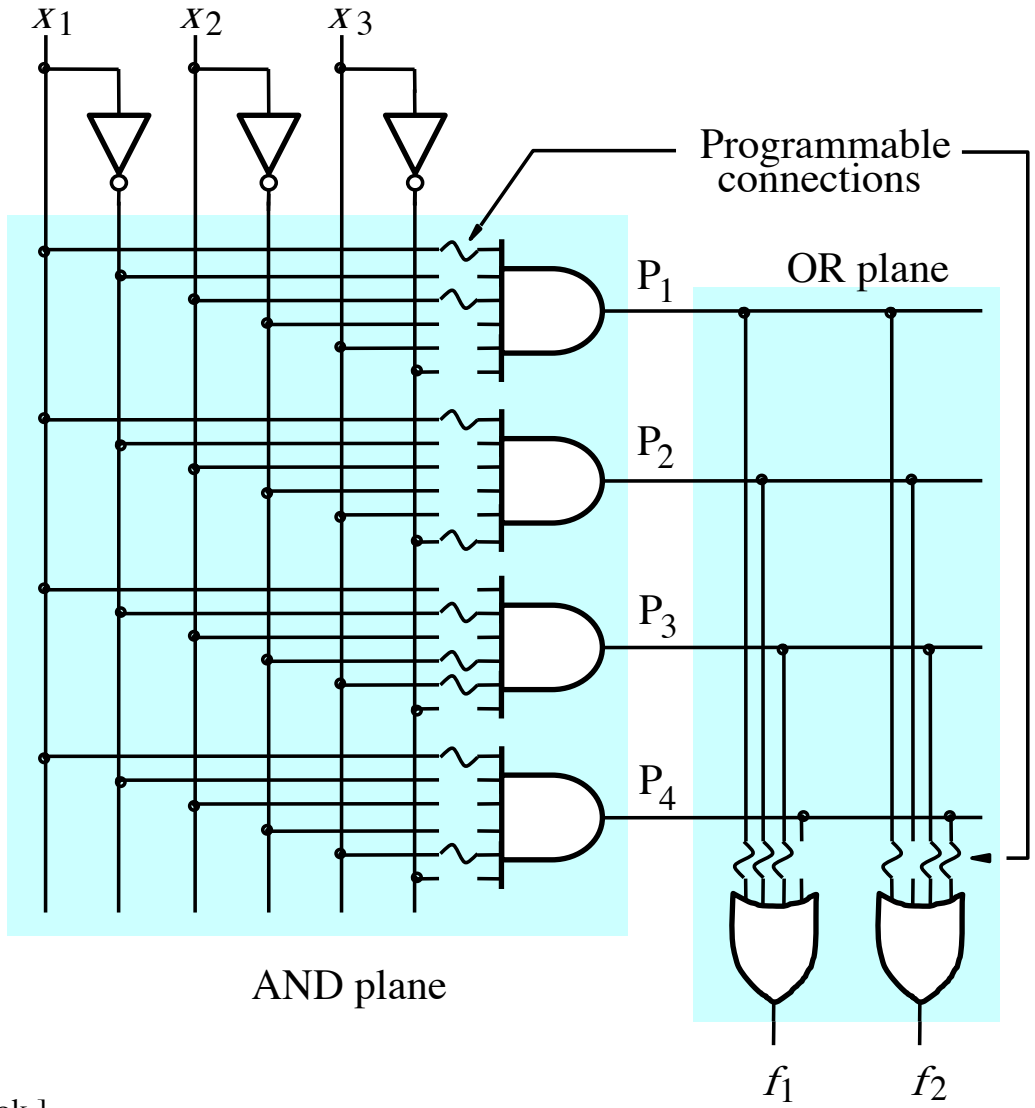

[Figure B.26 from textbook]

Customary Schematic for PLA

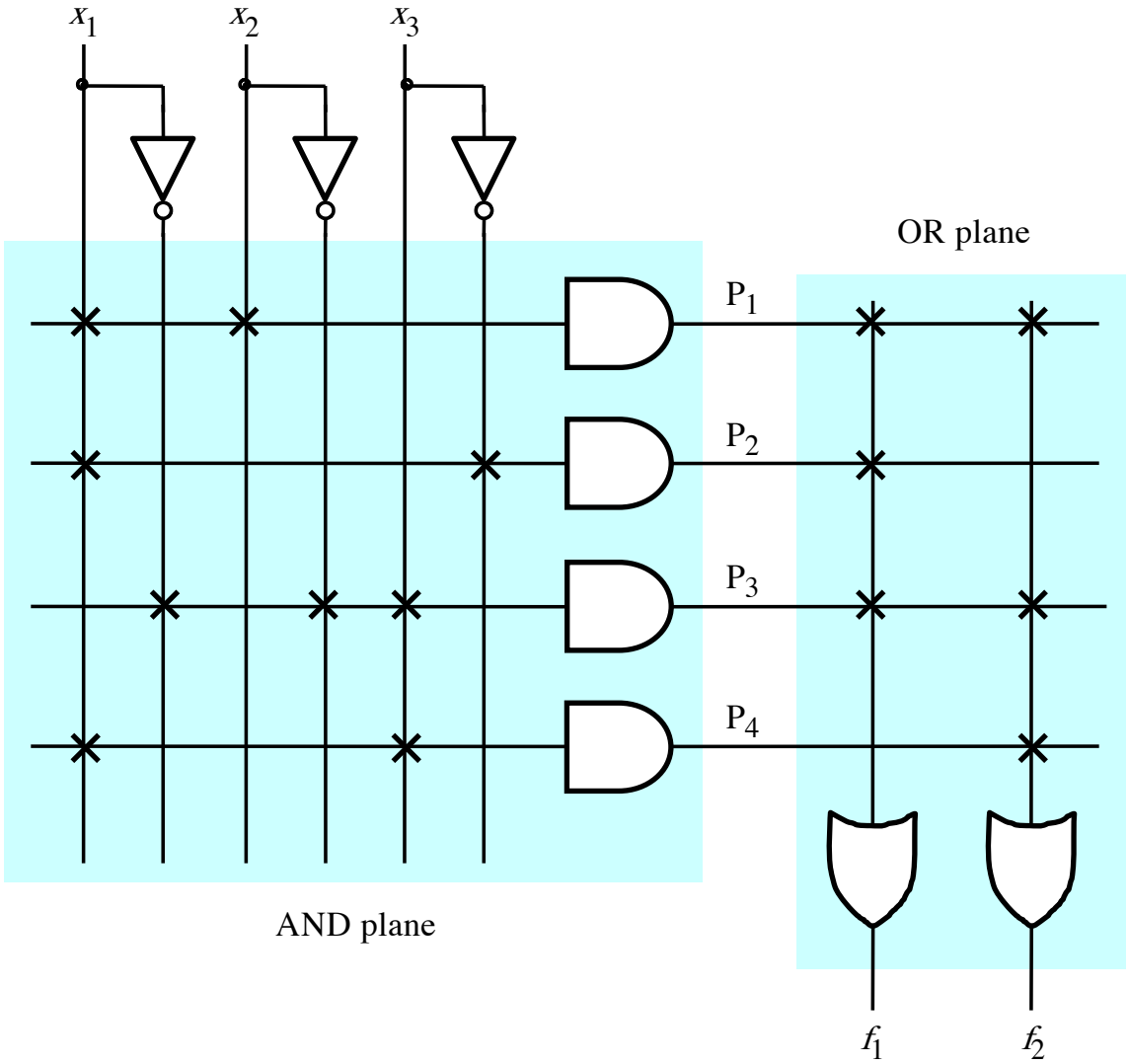

[Figure B.27 from textbook]

Customary Schematic for PLA

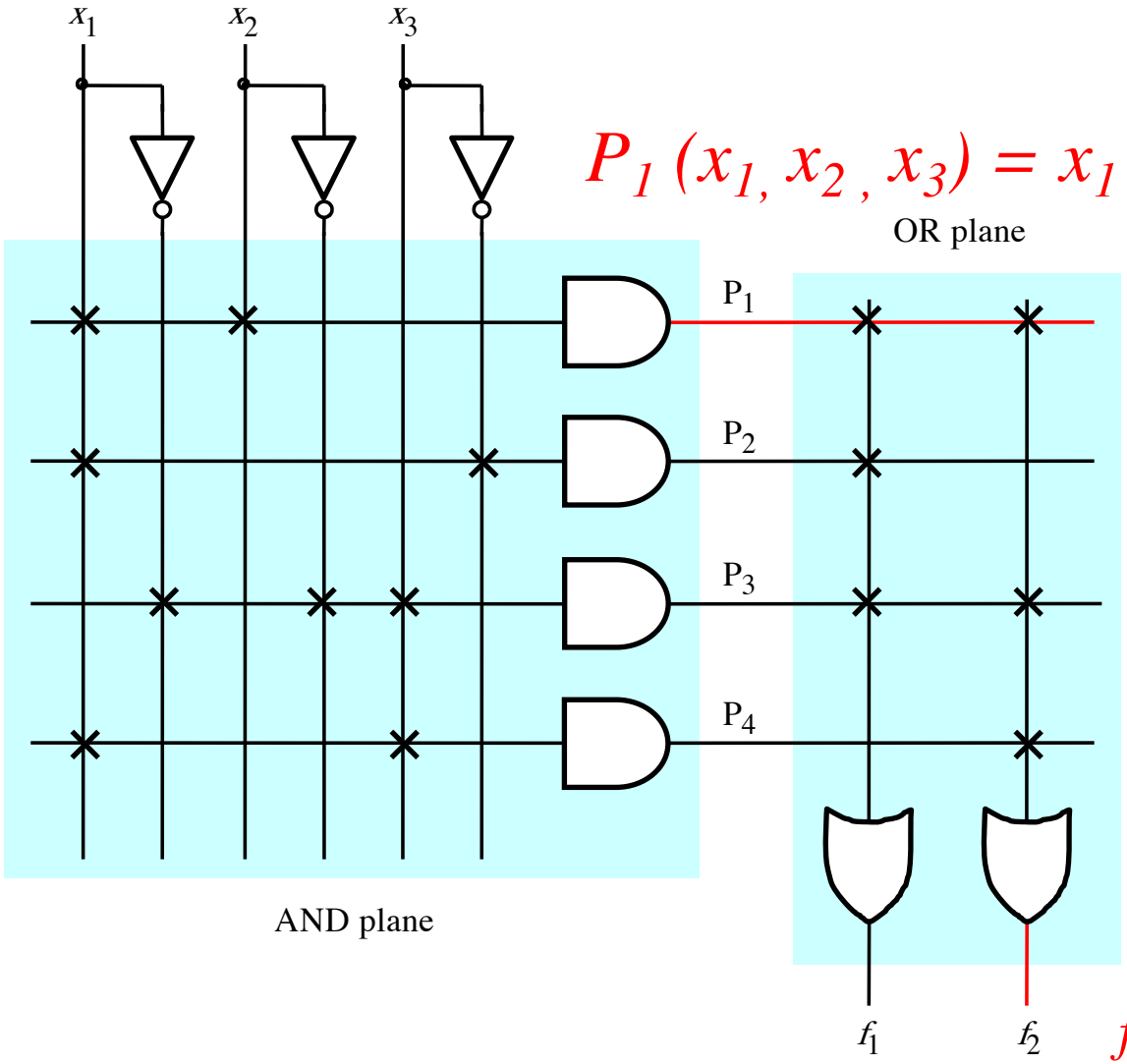

$$P_1(x_1, x_2, x_3) = x_1 x_2$$

$$f_2 = P_1 + P_3 + P_4$$

[Figure B.27 from textbook]

Programmable Array Logic (PAL)

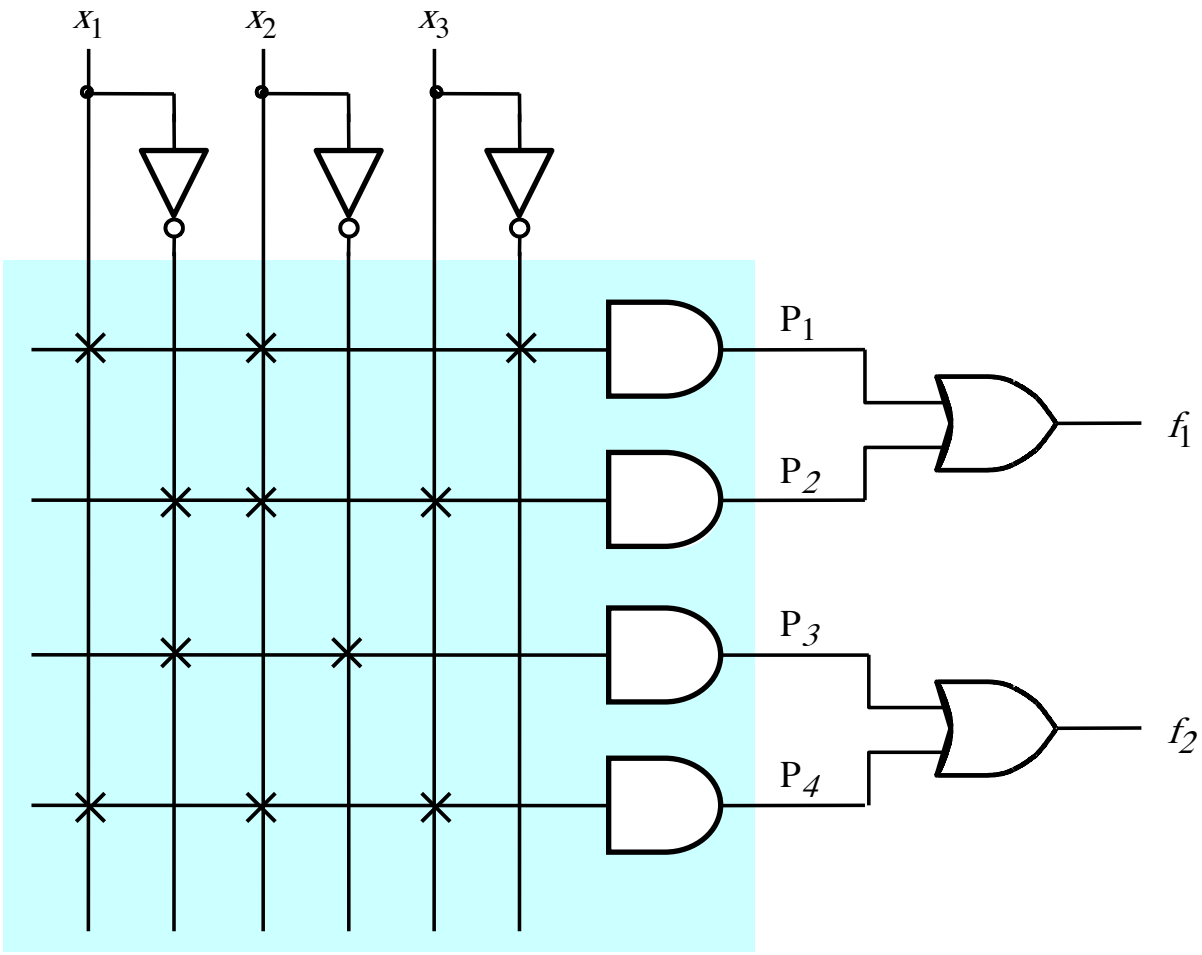

AND plane

[Figure B.28 from textbook]

Programmable Array Logic (PAL)

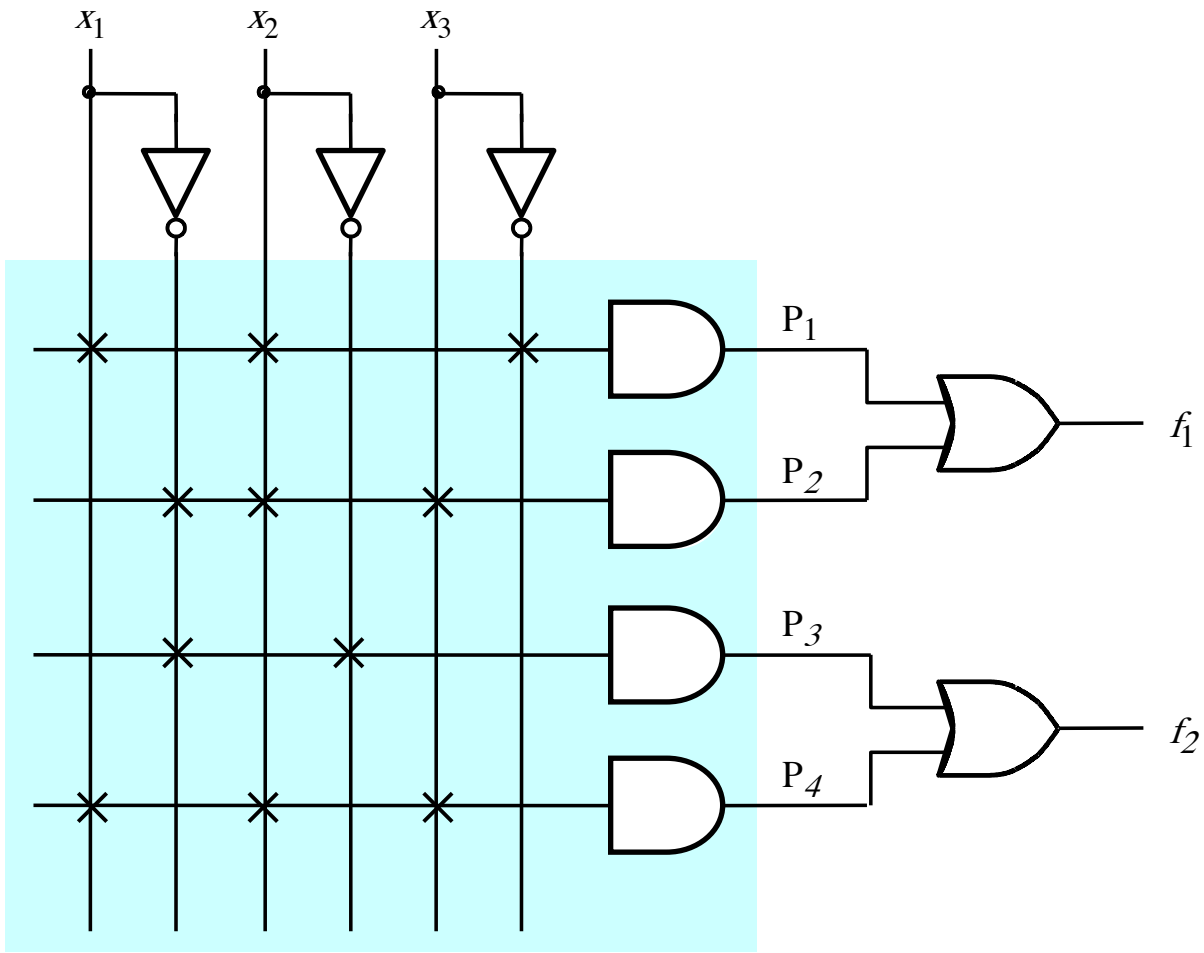

Only the AND plane is programmable.
The OR plane is fixed.

[Figure B.28 from textbook]

Questions?

THE END