REVISIONS				
ZONE	REV	DESCRIPTION	Date	APPROVED

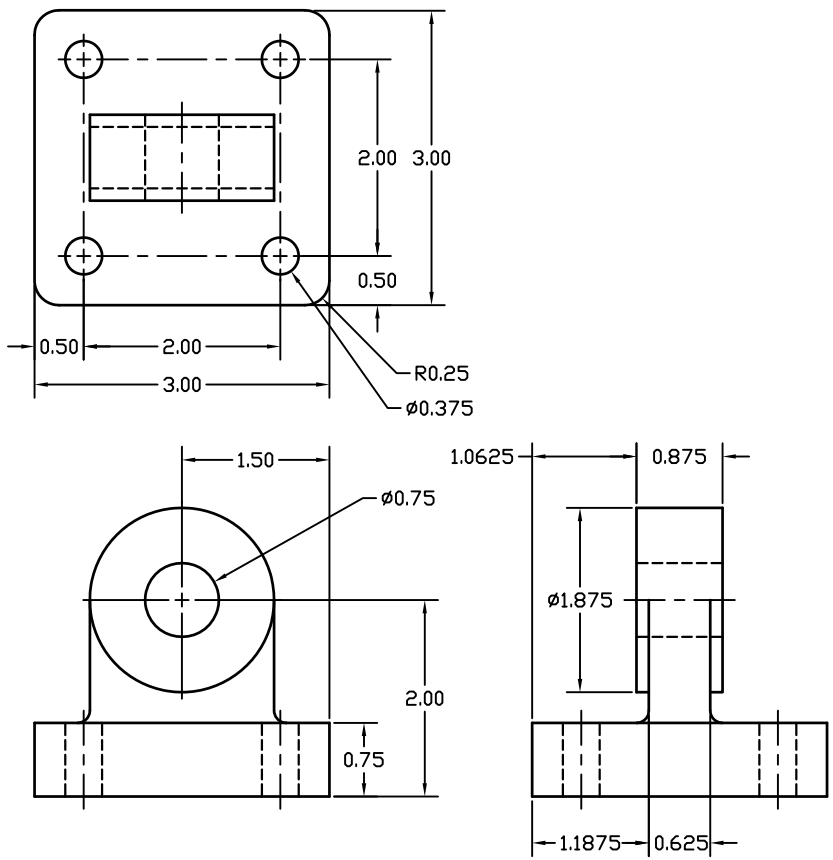

TSM 216

Jim Shahan	SIZE	FSCM NO.	DWG NO. **Problem 9.86**	REV
01.26.2009	Scale		Sheet	