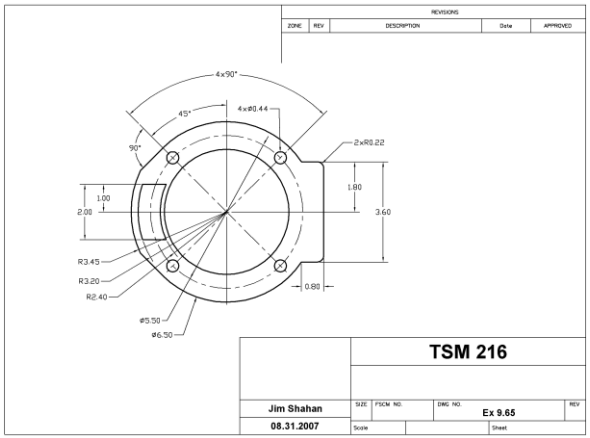
REVISIONS
ZONE
REV
DESCRIPTION
Date
APPROVED
4x90°
45°
4xø0.44
90°
2xR8.22
1.00
2.00
1.80
3.60
R3.45
R3.20
R2.40
0.80
ø5.50
ø6.50
TSM 216
Jim Shahan
08.31.2007
SIZE
FSCM NO.
DWG NO.
Ex 9.65
REV
Scale
Sheet

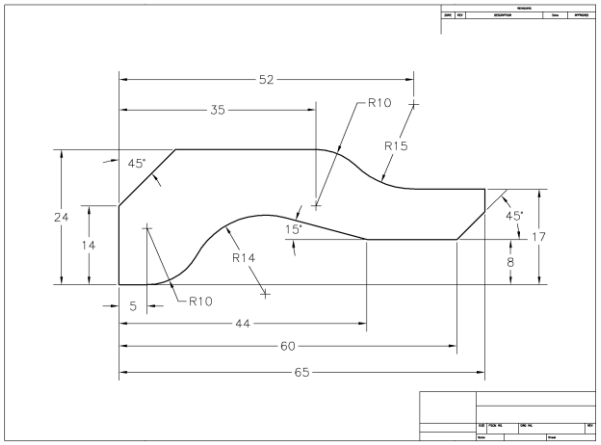
52
35
R10
R15
45°
24
14
15°
R14
45°
17
8
5
R10
44
60
65

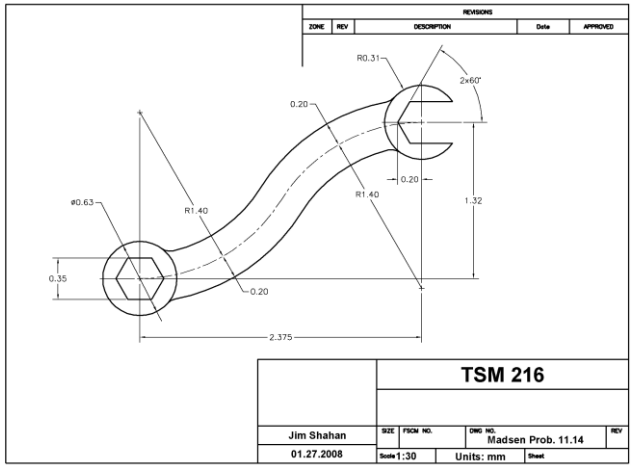
REVISIONS
ZONE
REV
DESCRIPTION
Date
APPROVED
R0.31
2x60°
0.20
0.20
ø0.63
R1.40
R1.40
1.32
0.35
0.20
2.375
TSM 216
Jim Shahan
01.27.2008
SIZE
FSCM NO.
DWG NO.
Madsen Prob. 11.14
REV
Scale 1:30
Units: mm
Sheet

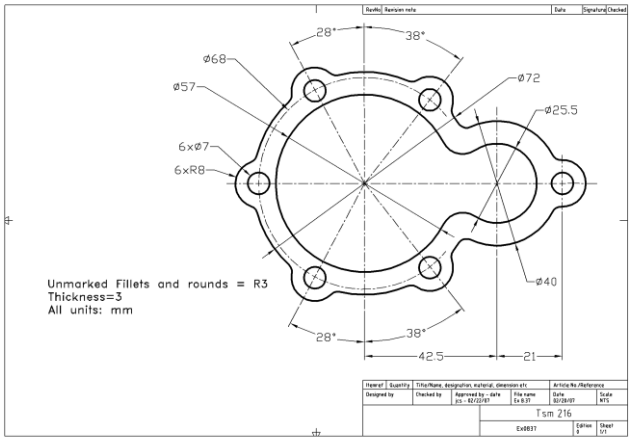
28°
38°
ø68
ø57
ø72
ø25.5
6xø7
6xR8
ø40
Unmarked Fillets and rounds = R3
Thickness=3
All units: mm
28°
38°
42.5
21
Tsm 216
Ex9837

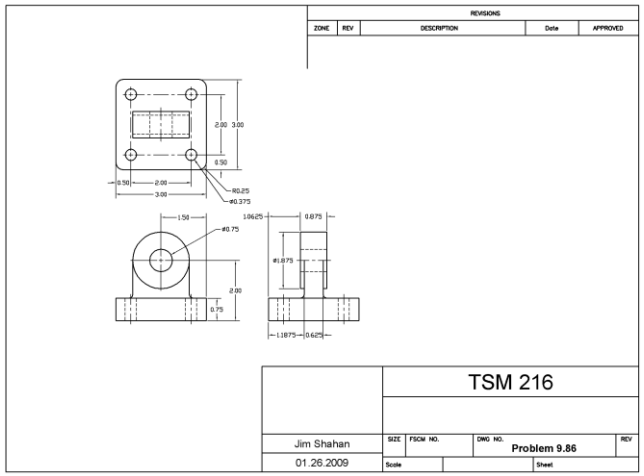
REVISIONS
ZONE
REV
DESCRIPTION
Date
APPROVED
TSM 216
Jim Shahan
01.26.2009
SIZE
FSCM NO.
DWG NO.
Problem 9.86
REV
Scale
Sheet

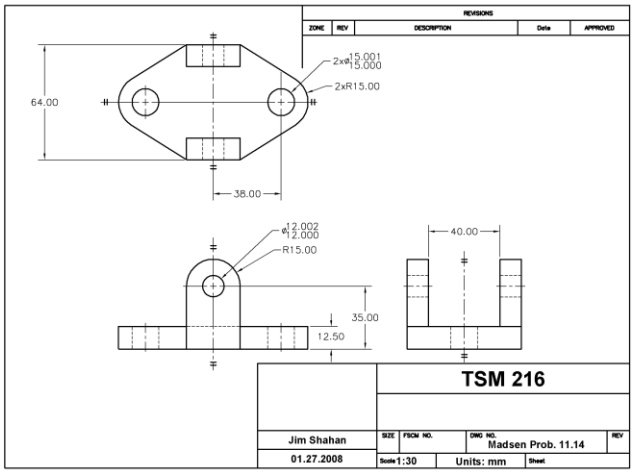
REVISIONS
ZONE
REV
DESCRIPTION
Date
APPROVED
64.00
38.00
2xR15.00
R15.00
35.00
12.50
40.00
TSM 216
Jim Shahan
01.27.2008
SIZE
FSCM NO.
DWG NO.
Madsen Prob. 11.14
REV
Scale 1:30
Units: mm
Sheet

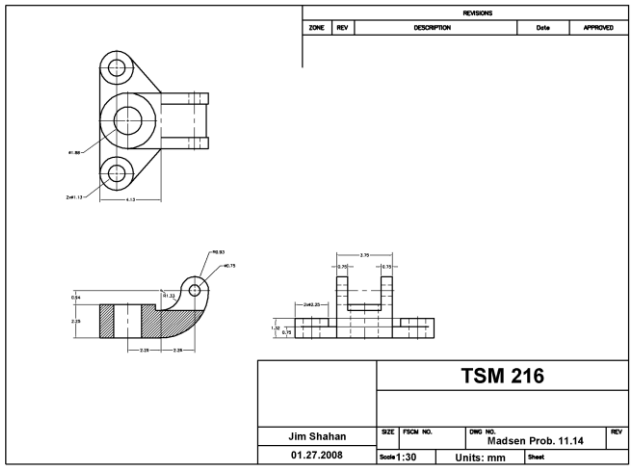
REVISIONS
ZONE
REV
DESCRIPTION
Date
APPROVED
TSM 216
Jim Shahan
01.27.2008
SIZE
FSCM NO.
DWG NO.
Madsen Prob. 11.14
REV
Scale 1:30
Units: mm
Sheet

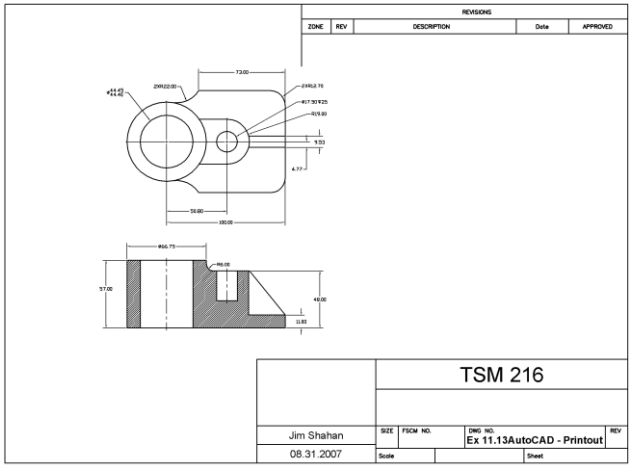
REVISIONS
ZONE
REV
DESCRIPTION
Date
APPROVED
TSM 216
Jim Shahan
08.31.2007
SIZE
FSCM NO.
DWG NO.
Ex 11.13AutoCAD - Printout
REV
Scale
Sheet

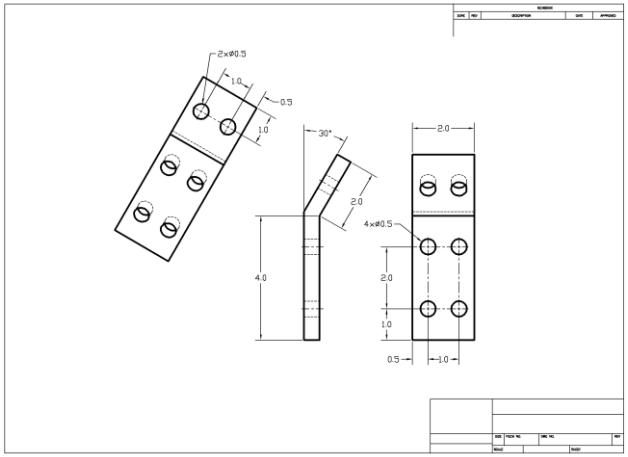

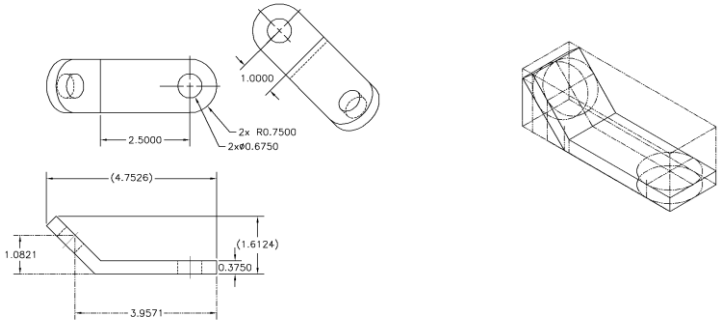
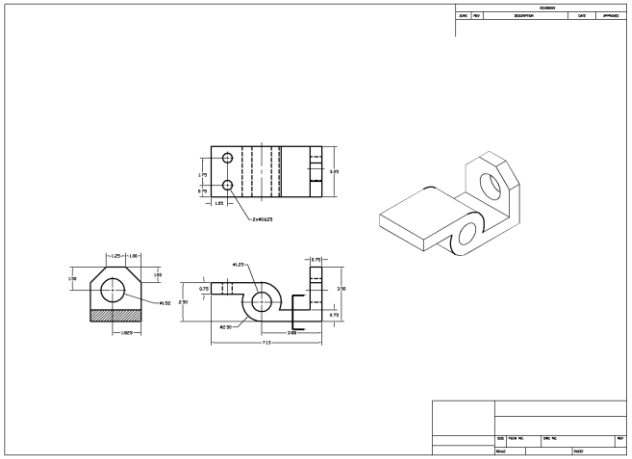
Isometric Construction Demo